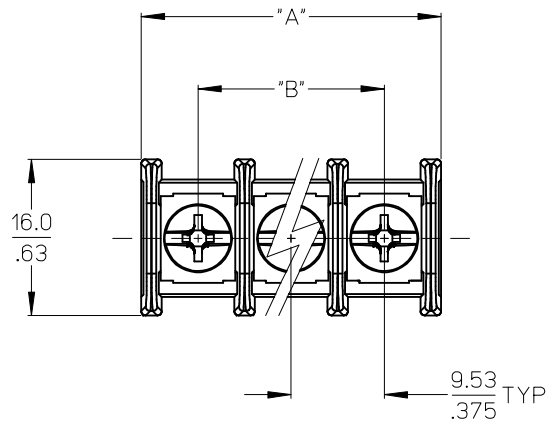

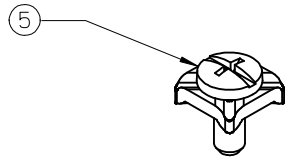

REF. -50 OPT. SCREW
(WHERE APPLICABLE)

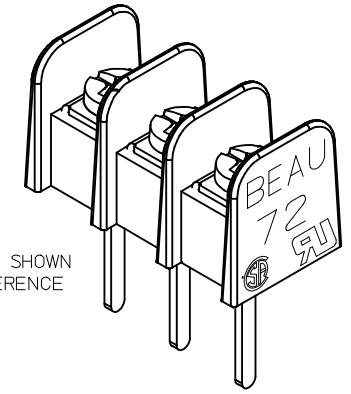

3 CIRCUIT SHOWN
FOR REFERENCE

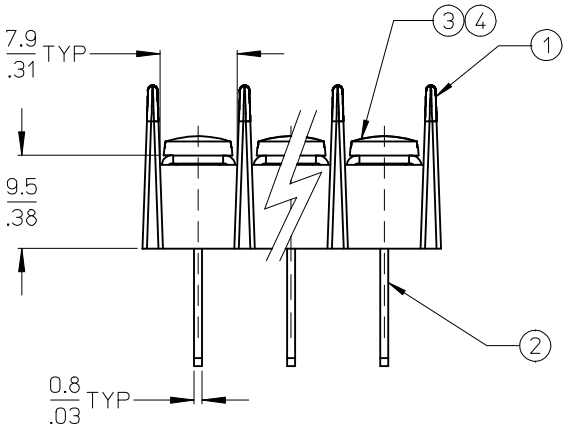

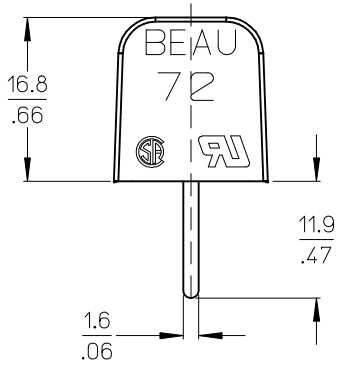

No OF CIRCUITS	DIM "A" mm	DIM "A" Inch	DIM "B" mm	DIM "B" Inch	ASSY. MAT. NO. (STD -C)	ASSY. MAT. NO. (-C -49 OPT)	ASSY. MAT. NO. (-C -50 OPT)
2	21.1	0.83	9.53	0.375	387212302	387212902	387213502
3	30.6	1.21	19.05	0.750	387212303	387212903	387213503
4	40.2	1.58	28.58	1.125	387212304	387212904	387213504
5	49.7	1.96	38.10	1.500	387212305	387212905	387213505
6	59.2	2.33	47.63	1.875	387212306	387212906	387213506
7	68.7	2.71	57.15	2.250	387212307	387212907	387213507
8	78.3	3.08	66.68	2.625	387212308	387212908	387213508
9	87.8	3.46	76.20	3.000	387212309	387212909	387213509
10	97.3	3.83	85.73	3.375	387212310	387212910	387213510
11	106.8	4.21	95.25	3.750	387212311	387212911	387213511
12	116.4	4.58	104.78	4.125	387212312	387212912	387213512
13	125.9	4.96	114.30	4.500	387212313	387212913	387213513
14	135.4	5.33	123.83	4.875	387212314	387212914	387213514
15	144.9	5.71	133.35	5.250	387212315	387212915	387213515
16	154.5	6.08	142.88	5.625	387212316	387212916	387213516
17	164.0	6.46	152.40	6.000	387212317	387212917	387213517
18	173.5	6.83	161.93	6.375	387212318	387212918	387213518
19	183.0	7.21	171.45	6.750	387212319	387212919	387213519
20	192.6	7.58	180.98	7.125	387212320	387212920	387213520
21	202.1	7.96	190.50	7.500	387212321	387212921	387213521
22	211.6	8.33	200.03	7.875	387212322	387212922	387213522
23	221.1	8.71	209.55	8.250	387212323	387212923	387213523
24	230.7	9.08	219.08	8.625	387212324	387212924	387213524
25	240.2	9.46	228.60	9.000	387212325	387212925	387213525
26	249.7	9.83	238.13	9.375	387212326	387212926	387213526

NOTES:

1. MATERIAL: SEE TABLE.
2. FINISHES: SEE TABLE.
3. PRODUCT SPECIFICATION: NOT REQUIRED.
4. "XX" REFERS TO THE QUANTITY OF CIRCUITS.
5. ROHS COMPLIANT.

ITEM	QTY.	DESCRIPTION	MATERIAL	FINISH
4	XX	SCRW&WSHR,#6-32X.25 PANHD,PH-SL (OPT -50)	STEEL	ZN, CLEAR CHROMATE
4	XX	SCREW #6-32X.250 BHD PHSL (OPT -49)	BRASS	NICKEL PLATE
3	XX	SCREW #6-32X.250 BHD PHSL (STD)	STEEL	ZN, CLEAR CHROMATE
2	XX	TERM WW 6C SN-KT	BRASS	TIN PLATE
1	1	INSULATOR SR BTS PC MOMTG	POLYESTER (PBT)	BLACK

RELEASED
EC NO: WNA2009-0445 2009/07/01
DRWN: JENCINAS 2009/07/02
CHKD: CYORK
APPR: JMACNEIL 2009/07/02
DESCRIPTION
REV A

QUALITY SYMBOLS
▼=0
Ⓒ=0

GENERAL TOLERANCES (UNLESS SPECIFIED)

	mm	INCH
4 PLACES	± ---	± ---
3 PLACES	± ---	± .005
2 PLACES	± 0.13	± .01
1 PLACE	± .3	± ---
ANGULAR ± 2 °		

DRAFT WHERE APPLICABLE MUST REMAIN WITHIN DIMENSIONS

DIMENSION STYLE: MM/IN
SCALE: 2:1
DESIGN UNITS: INCH
THIRD ANGLE PROJECTION

DRAWN BY: J.ENCINAS DATE: 2009/06/25
CHECKED BY: C.YORK DATE: 2009/06/25
APPROVED BY: J.MACNEIL DATE: 2009/06/25

TITLE: 9.53MM/.375" PCB BARRIER TERMINAL STRIP NO MOUNTING ENDS

MOLEX INCORPORATED

MATERIAL NO.: SEE CHART
DOCUMENT NO.: SD-38721-006
SHEET NO.: 1 OF 1
SIZE: B

THIS DRAWING CONTAINS INFORMATION THAT IS PROPRIETARY TO MOLEX INCORPORATED AND SHOULD NOT BE USED WITHOUT WRITTEN PERMISSION

Unikeyic Electronics

Global Electronic Components Distributor

Click to view pricing, inventory, delivery, and lifecycle information:

molex:

348242245 194270031 197054301 34708-2028 355240920 197134001 348268126 502585-0370
0477256010 349672001 502380-0800 528520870 503988100 0464363133 347072012 459850483
464373005 502584-0870 502584-1060 194290026 357470310 528061110 347928042 194290039
347910140 0194360214 0351510214 351820290 5023860371 528523070