CUI Devices is now Same Sky! Learn More

MODEL: CMS-1805-24SP | DESCRIPTION: SPEAKER

FEATURES

- 4 ohm
- rated 1.0 W
- solder pads



RoHS

SPECIFICATIONS

parameter	conditions/description	min	typ	max	units
input power	in free air in 5 cc box		1 2	1.5 2.5	W W
impedance		3.4	4	4.6	Ω
resonant frequency (Fo)	in free air in 5 cc box	304 488	380 610	456 732	Hz Hz
frequency response		Fo		20,000	Hz
sound pressure level	at 1.0 W, 50 cm, avg 0.8, 1.0, 1.2, 1.5 kHz, in free air at 2.0 W, 50 cm, avg 0.8, 1.0, 1.2, 1.5 kHz, in 5 cc box	76 76	79 79	82 82	dB dB
distortion	at 1.0 kHz, 1.0 W, 50 cm			5	%
buzz, rattle, etc.	must be normal at sine wave, frequency range			2.0	V
polarity	cone moves forward w/ positive dc current to “+” terminal				
dimensions	Ø18 x 5.0				mm
magnet	Nd-Fe-B				
frame material	PBT + 15% GF				
cone material	PU + PEN				
terminal	solder pads				
weight			3.2		g
operating temperature		-20		55	°C
storage temperature		-25		60	°C
hand soldering	for maximum 2 seconds	360		380	°C
RoHS	yes				

Notes: 1. All specifications measured at 15~35°C, humidity at 25~75%, unless otherwise noted.

MECHANICAL DRAWING

units: mm
tolerance: ±0.2 mm

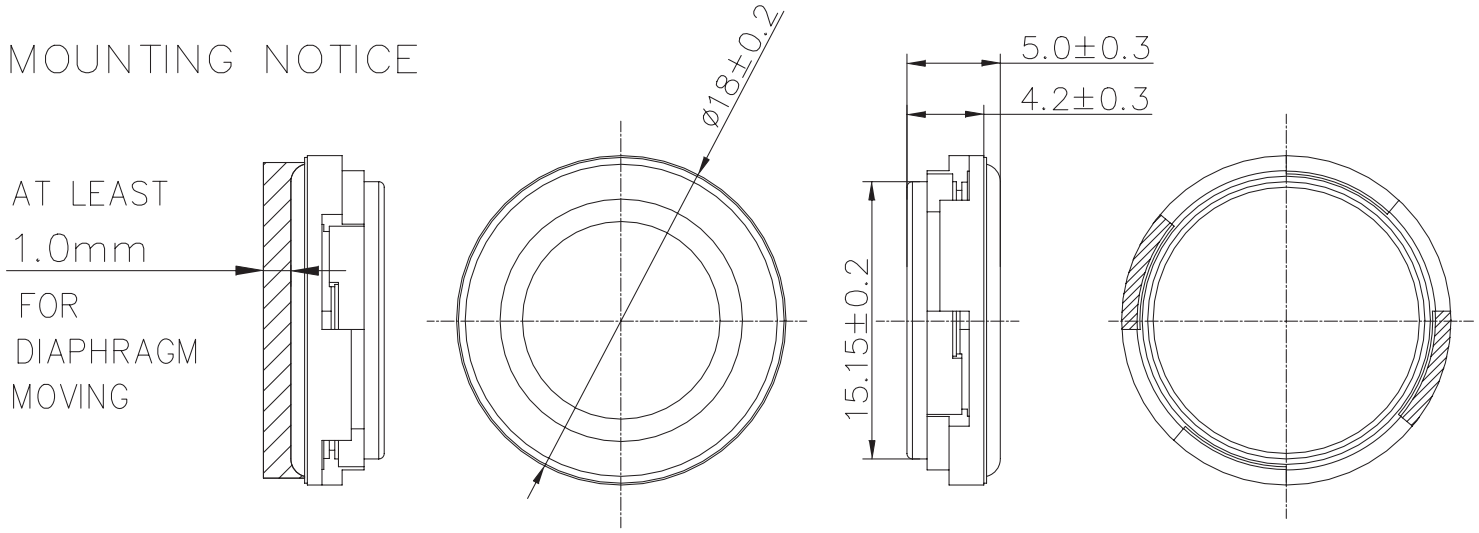

RESPONSE CURVES (IN FREE AIR)

Frequency Response Curve

Test Conditions: 1.0 W / 50 cm

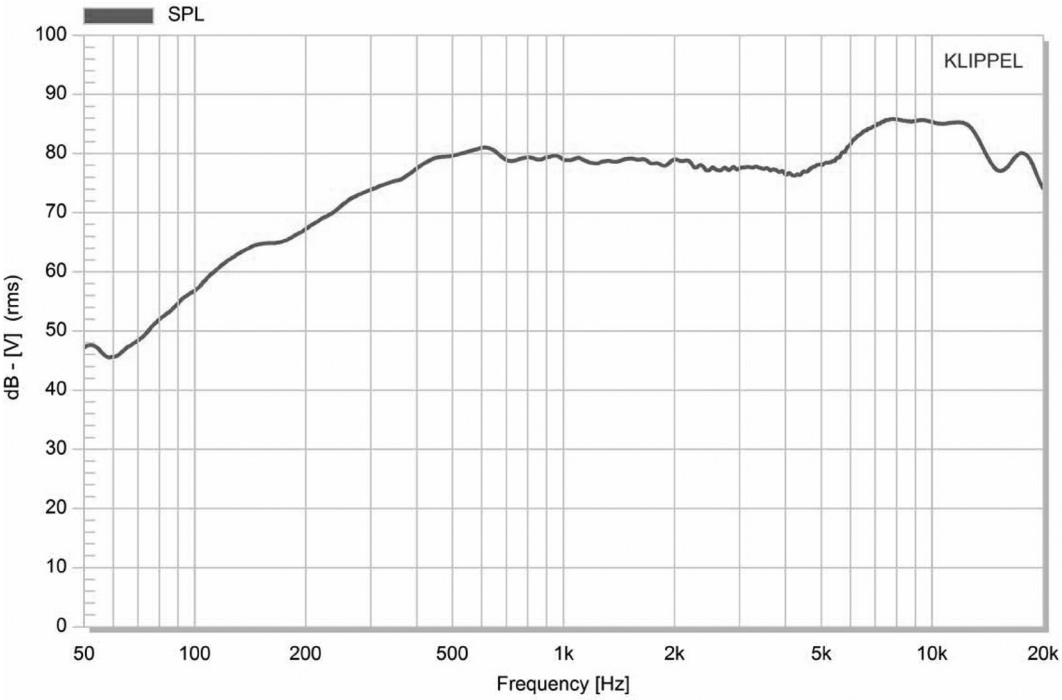

Total Harmonic Distortion Curve

Test Conditions: 1.0 W / 50 cm

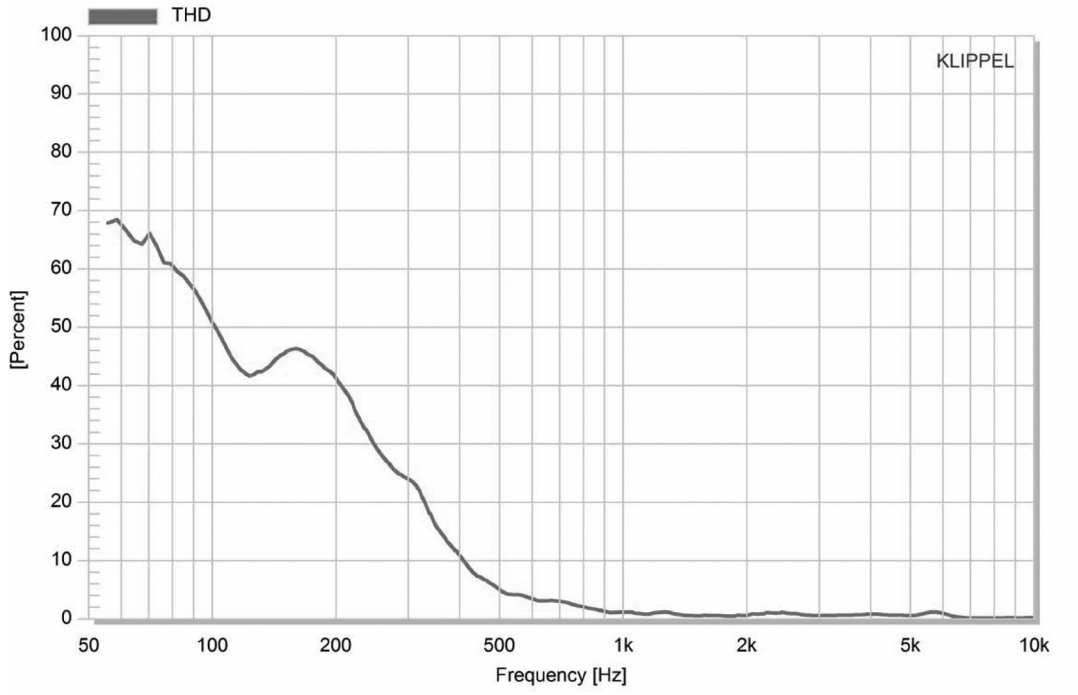

RESPONSE CURVES (IN 5 CC BOX)

Frequency Response Curve

Test Conditions: 2.0 W / 50 cm

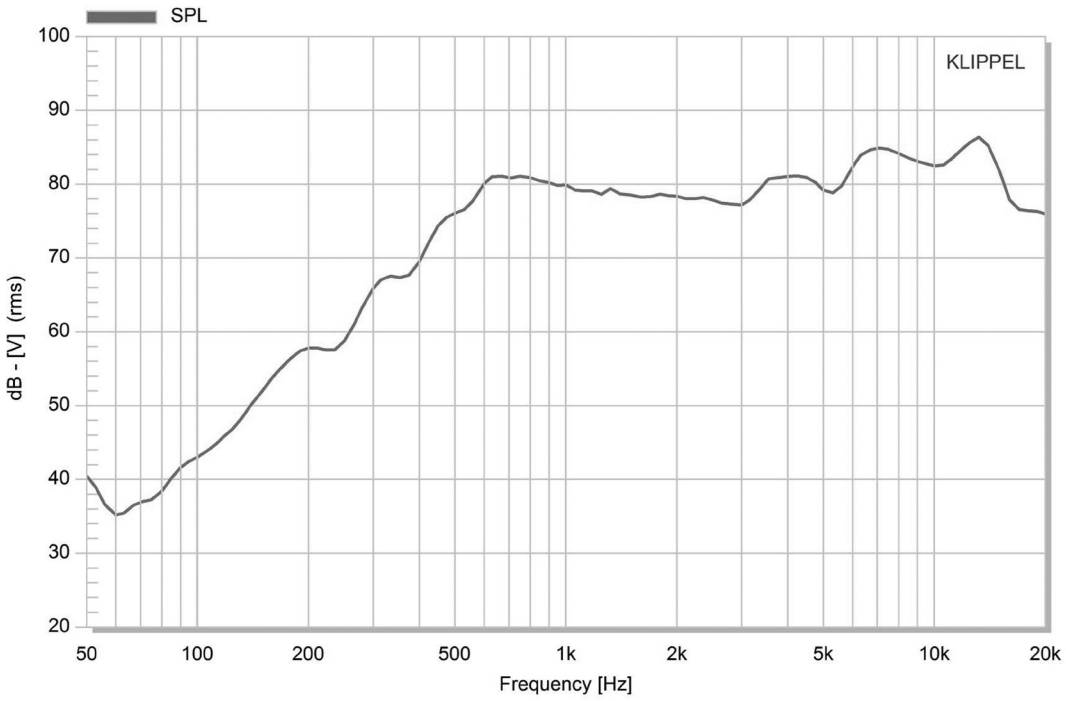

Total Harmonic Distortion Curve

Test Conditions: 2.0 W / 50 cm

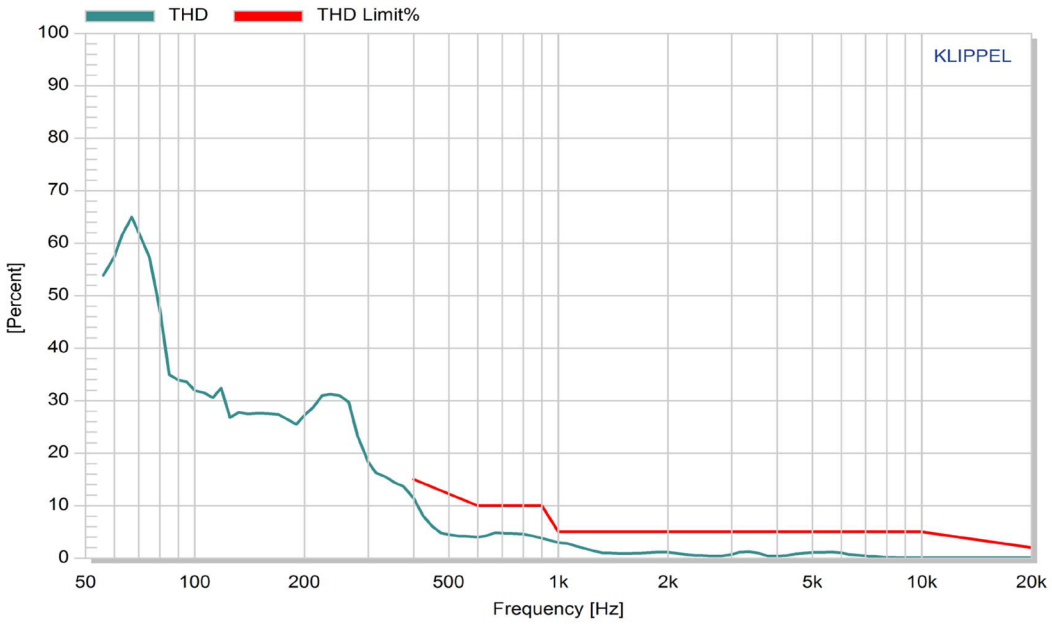

Frequency[Hz]	400	600	900	1000	10000	20000
THD Limit[%]	15	10	10	5	5	2

REVISION HISTORY

rev.	description	date
1.0	initial release	06/27/2023
1.01	CUI Devices rebranded to Same Sky	09/11/2024

The revision history provided is for informational purposes only and is believed to be accurate.

Same Sky offers a one (1) year limited warranty. Complete warranty information is listed on our website.

Same Sky reserves the right to make changes to the product at any time without notice. Information provided by Same Sky is believed to be accurate and reliable. However, no responsibility is assumed by Same Sky for its use, nor for any infringements of patents or other rights of third parties which may result from its use.

Same Sky products are not authorized or warranted for use as critical components in equipment that requires an extremely high level of reliability. A critical component is any component of a life support device or system whose failure to perform can be reasonably expected to cause the failure of the life support device or system, or to affect its safety or effectiveness.