AZ DISPLAYS

SPECIFICATIONS FOR LIQUID CRYSTAL DISPLAY

CUSTOMER APPROVAL			
※ **PART NO. :** ACM2004D-RN-GBH-D (AZ DISPLAYS) VER 1.0			
APPROVAL		**COMPANY CHOP**	
CUSTOMER COMMENTS			

AZ DISPLAYS ENGINEERING APPROVAL		
DESIGNED BY	**CHECKED BY**	**APPROVED BY**

REVISION RECORD

REVISION	REVISION DATE	PAGE	CONTENTS
VER1.0	**02/08-2011**		**FIRST ISSUE**

※ CONTENTS

1.0 GENERAL SPECS
2.0 ABSOLUTE MAXIMUM RATINGS
3.0 ELECTRICAL CHARACTERISTICS
4.0 OPTICAL CHARACTERISTICS
5.0 BLOCK DIAGRAM
6.0 PIN ASSIGNMENT
7.0 POWER SUPPLY
8.0 TIMING CHARACTERISTICS
9.0 MECHANICAL DIAGRAM
10.0 RELIABILITY TEST
11.0 DISPLAY INSTRUCTION TABLE
12.0 STANDARD CHARACTER PATTERNS
13.0 PRECAUTION FOR USING LCM

1.0 GENERAL SPECS

1. Display Format	20*4 Character
2. Power Supply	5.0V
3. Module Outline Dimension	98.0mm(W) x 60.0mm(H) x max 9.5mm(D)
4. Viewing Area(W*H)	76.0mm(W) x 25.2mm(H)
5. Dot Size (W*H)	0.55mm(W) x 0.55mm(H)
6. Dot Pitch (W*H)	0.60mm(W) x 0.60mm(H)
7. Character Size (W*H)	2.95mm(W) x 4.75mm(H)
8. Character Pitch (W*H)	3.55mm(W) x 5.35mm(H)
9. Viewing Direction	6:00 O'Clock
10. Driving Method	1/16Duty,1/5Bias
11. Control IC	ST7066U-0A or compatible
12. Display Mode	STN(Y-G)/ Positive / Reflective
13. Backlight	NC
14. Operating Temperature	-20ºC ~ 70ºC
15. Storage Temperature	-30ºC ~ 80ºC
16. RoHS	RoHS compliant

2.0 ABSOLUTE MAXIMUM RATINGS

Item	Symbol	Min	Typ	Max	Unit
Operating temperature	Top	-20	--	70	ºC
Storage temperature	Tst	-30	--	80	ºC
Input voltage	Vin	Vss-0.3	--	Vdd+0.3	V
Supply voltage for logic	Vdd- Vss	2.7	--	5.5	V
Supply voltage for LCD driving	Vdd- V0	3.0	--	8.0	V

3.0 ELECTRICAL CHARACTERISTICS

3.1 Electrical Characteristics Of LCM

Item	Symbol	Condition	Min	Typ	Max	Unit
Power Supply Voltage	Vdd	25ºC	4.8	5.0	5.2	V
Power Supply Current	Idd	Vdd=5.0V, fosc=270kHz	--	1.5	2.0	mA
Input voltage (high)	Vih	Pins:(E,RS,R/W,DB0-DB7) VDD=5V	2.5	--	Vdd	V
Input voltage (low)	Vil		-0.3	--	0.6	V
Recommended LC Driving Voltage	Vdd –V0	-20ºC	4.6	4.8	5.0	V
		25ºC	4.3	4.5	4.7	
		70ºC	4.0	4.2	4.4	

4.0 OPTICAL CHARACTERISTICS (Ta=25ºC)

Item	Symbol	Condition	Min	Typ	Max	Unit
Viewing angle (Left - right)	θ2	Cr ≥ 2.0	-35	-	35	deg
Viewing angle (Up-down)	θ1	Cr ≥ 2.0	-25	-	40	deg
Contrast Ratio	Cr	θ1=0°, θ2=0°	-	6.5	-	
Response time (rise)	Tr	θ1=0°, θ2=0°	-	180	300	ms
Response time (fall)	Tf	θ1=0°, θ2=0°	-	150	250	ms

(1). Definition of Optical Response Time

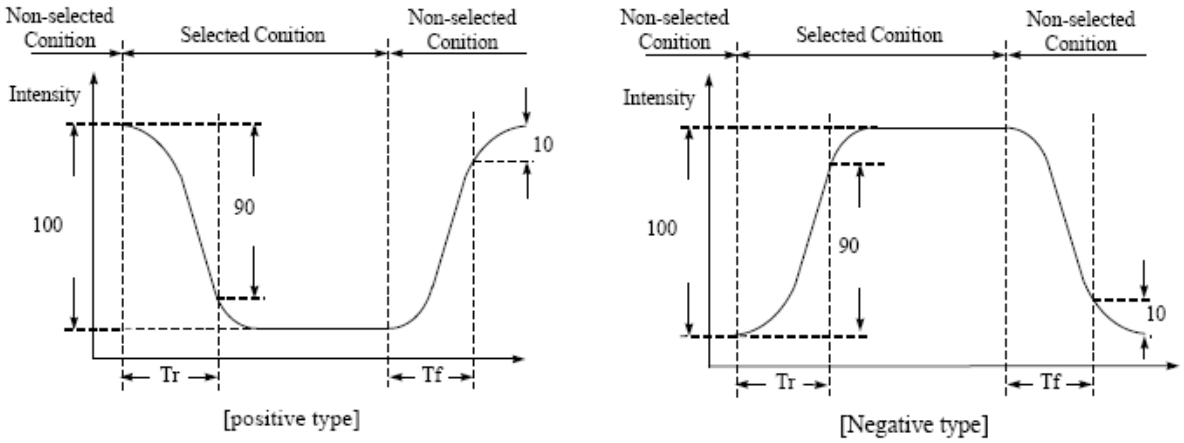

(2). Definition of Contrast Ratio

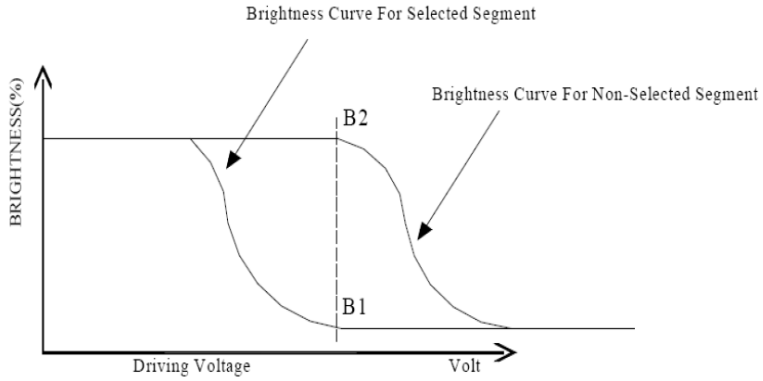

$$Cr = \frac{\text{Brightness of Non-selected Segment(B2)}}{\text{Brightness of selected Segment(B1)}}$$

(3). Definition of Viewing Angle θ2 and θ1

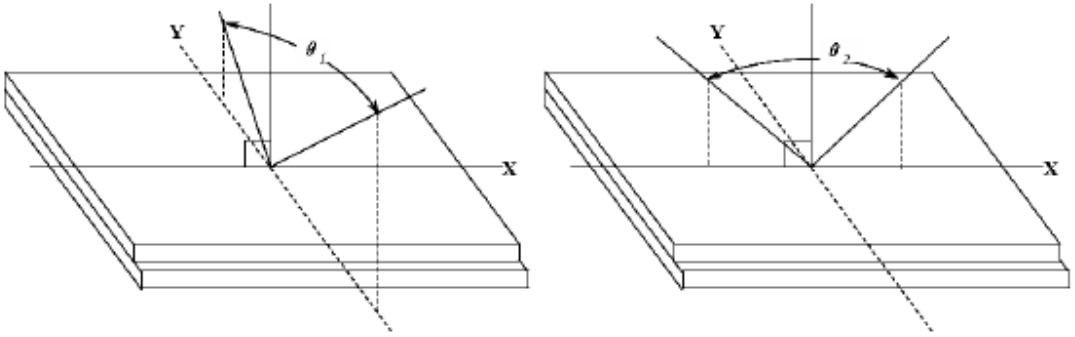

5.0 BLOCK DIAGRAM

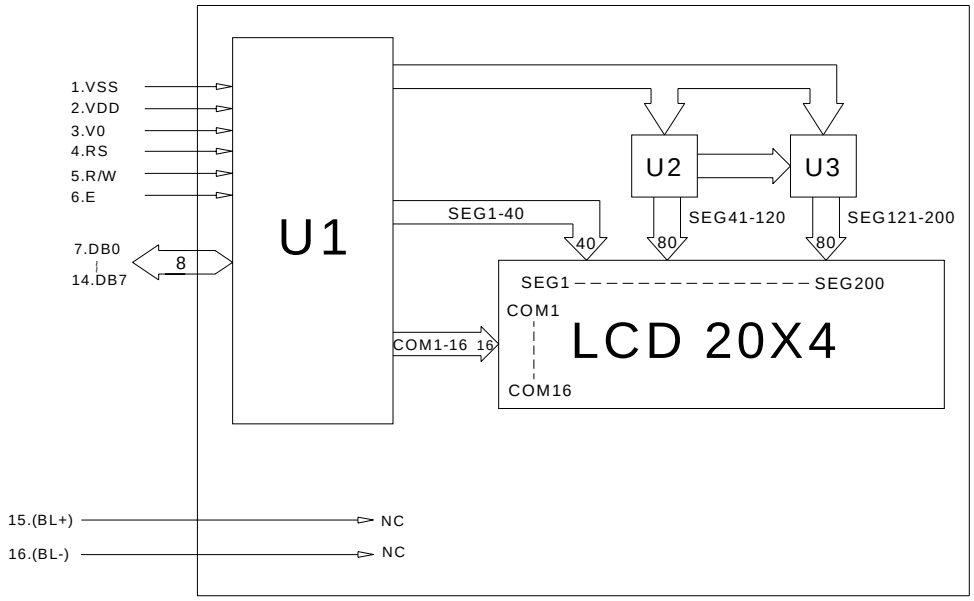

6.0 PIN ASSIGNMENT

Pin No.	Symbol	Function
1	Vss	Ground
2	Vdd	+5.0V
3	V0	LCD contrast adjust
4	RS	Register select
5	R/W	Read / Write Signal
6	E	Enable Signal
7	DB0	Data bit 0
8	DB1	Data bit 1
9	DB2	Data bit 2
10	DB3	Data bit 3
11	DB4	Data bit 4
12	DB5	Data bit 5
13	DB6	Data bit 6
14	DB7	Data bit 7
15	BL+	NC
16	BL-	NC

7.0 POWER SUPPLY

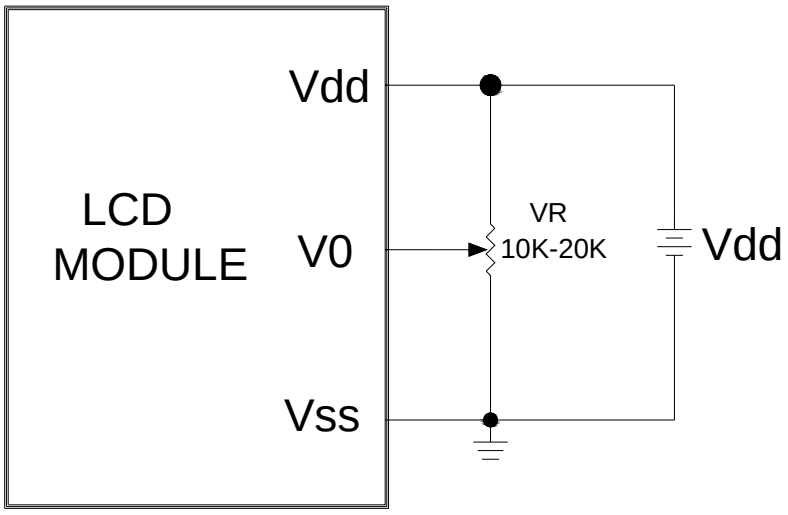

8.0 TIMING CHARACTERISTICS

Write mode (Writing Data from MPU to ST7066U)

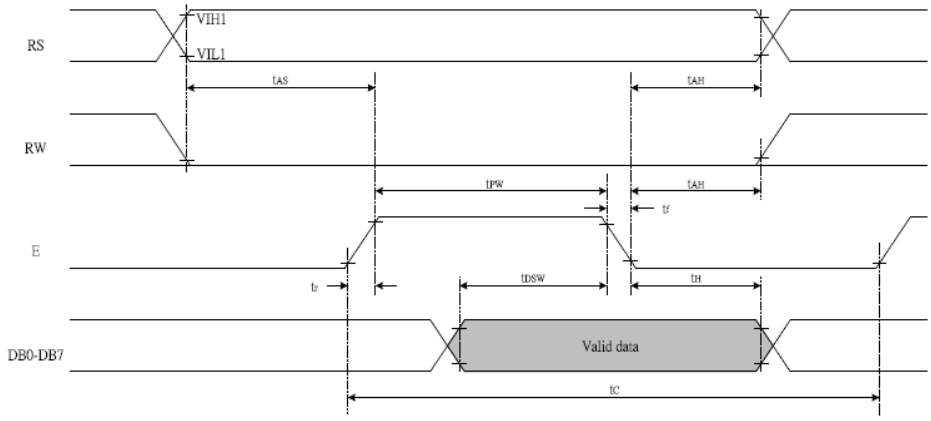

Read mode (Reading Data from ST7066U to MPU)

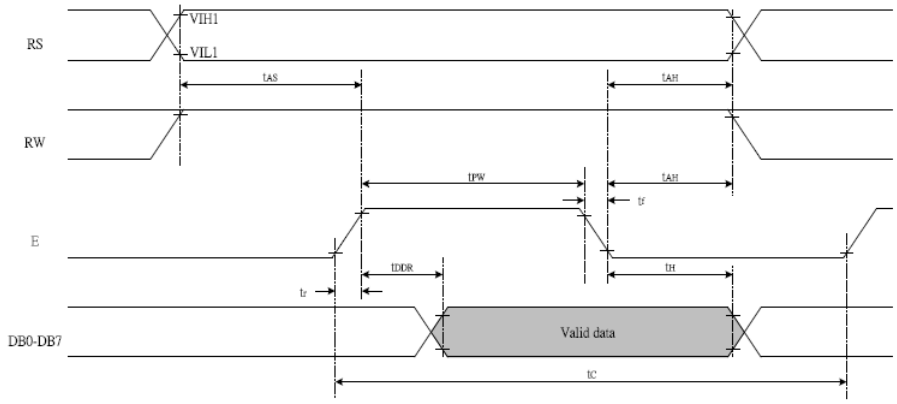

Write Mode (Writing data from MPU to ST7066U)						
T_C	Enable Cycle Time	Pin E	1200	-	-	ns
T_{PW}	Enable Pulse Width	Pin E	140	-	-	ns
T_R, T_F	Enable Rise/Fall Time	Pin E	-	-	25	ns
T_{AS}	Address Setup Time	Pins: RS,RW,E	0	-	-	ns
T_{AH}	Address Hold Time	Pins: RS,RW,E	10	-	-	ns
T_{DSW}	Data Setup Time	Pins: DB0 - DB7	40	-	-	ns
T_H	Data Hold Time	Pins: DB0 - DB7	10	-	-	ns
Read Mode (Reading Data from ST7066U to MPU)						
T_C	Enable Cycle Time	Pin E	1200	-	-	ns
T_{PW}	Enable Pulse Width	Pin E	140	-	-	ns
T_R, T_F	Enable Rise/Fall Time	Pin E	-	-	25	ns
T_{AS}	Address Setup Time	Pins: RS,RW,E	0	-	-	ns
T_{AH}	Address Hold Time	Pins: RS,RW,E	10	-	-	ns
T_{DDR}	Data Setup Time	Pins: DB0 - DB7	-	-	100	ns
T_H	Data Hold Time	Pins: DB0 - DB7	10	-	-	ns

For more details, please refer to IC specification.

9.0 MECHANICAL DIAGRAM

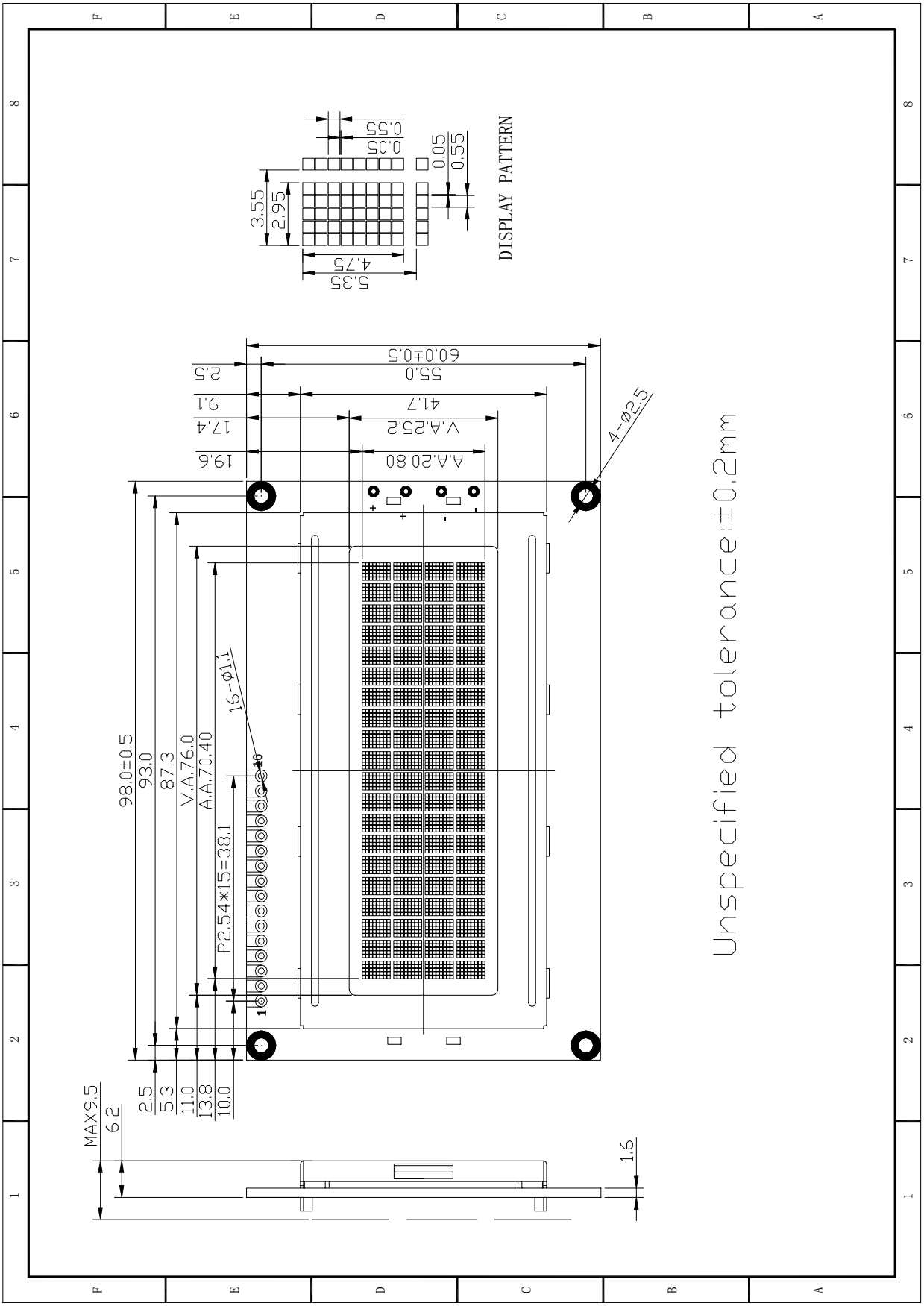

10.0 RELIABILITY TEST

NO	Test Item		Description	Test Condition	Remark
1	Environmental Test	High temperature storage	Applying the high storage temperature Under normal humidity for a long time Check normal performance	80 ºC 96hrs	
2		Low temperature storage	Applying the low storage temperature Under normal humidity for a long time Check normal performance	-30ºC 96hrs	
3		High temperature Operation	Apply the electric stress(Voltage and current) Under high temperature for a long time	70 ºC 96hrs	Note1
4		Low temperature Operation	Apply the electric stress Under low temperature for a long time	-20ºC 96hrs	Note1 Note2
5		High temperature/High Humidity Storage	Apply high temperature and high humidity storage for a long time	90% RH 40ºC 96hrs	Note2
6		Temperature Cycle	Apply the low and high temperature cycle -30ºC＜＞25ºC＜＞80ºC ＜＞25ºC 30min 10min 30min 10min ←——— 1 cycle ———→ Check normal performance	-30ºC/80ºC 10 cycle	
7	Mechanical Test	Vibration test(Package state)	Applying vibration to product check normal performance	Freq:10~55~10Hz Amplitude:0.75mm 1cycle time:1min X.Y.Z every direction for 15 cycles	
8		Shock test(package state)	Applying shock to product check normal performance	Drop them through 70cm height to strike horizontal plane	
9	Other				

Remark

Note1:Normal operations condition (25ºC±5ºC).

Note2:Pay attention to keep dewdrops from the module during this test.

11.0 DISPLAY INSTRUCTION TABLE

Instruction	Instruction Code										Description	Execution time (Temp = 25℃)		
	RS	RW	DB7	DB6	DB5	DB4	DB3	DB2	DB1	DB0		Fosc= 190KHz	Fosc= 270KHz	Fosc= 350KHz
Clear Display	0	0	0	0	0	0	0	0	0	1	Write "20H" to DDRAM and set DDRAM address to "00H" from AC	2.16ms	1.52ms	1.18ms
Return Home	0	0	0	0	0	0	0	0	1	-	Set DDRAM address to "00H" from AC and return cursor to its original position if shifted. The contents of DDRAM are not changed.	2.16ms	1.52ms	1.18ms
Entry Mode Set	0	0	0	0	0	0	0	1	I/D	S	Assign cursor moving direction and enable the shift of entire display	53μs	38μs	29μs
Display ON/ OFF Control	0	0	0	0	0	0	1	D	C	B	Set display (D), cursor(C), and blinking of cursor(B) on/off control bit.	53μs	38μs	29μs
Cursor or Display Shift	0	0	0	0	0	1	S/C	R/L	-	-	Set cursor moving and display shift control bit, and the direction, without changing of DDRAM data.	53μs	38μs	29μs
Function Set	0	0	0	0	1	DL	N	F	-	-	Set interface data length (DL: 8-bit/4-bit), numbers of display line (N: 2-line/1-line) and, display font type (F:5x10 dots/5x8 dots)	53μs	38μs	29μs
Set CGRAM Address	0	0	0	1	AC5	AC4	AC3	AC2	AC1	AC0	Set CGRAM address in address counter.	53μs	38μs	29μs
Set DDRAM Address	0	0	1	AC6	AC5	AC4	AC3	AC2	AC1	AC0	Set DDRAM address in address counter	53μs	38μs	29μs
Read Busy Flag and Address Counter	0	1	BF	AC6	AC5	AC4	AC3	AC2	AC1	AC0	Whether during internal operation or not can be known by reading BF. The contents of address counter can also be read.			
Write Data to RAM	1	0	D7	D6	D5	D4	D3	D2	D1	D0	Write data into internal RAM (DDRAM/CGRAM).	53μs	38μs	29μs
Read Data from RAM	1	1	D7	D6	D5	D4	D3	D2	D1	D0	Read data from internal RAM (DDRAM/CGRAM).	53μs	38μs	29μs

12.0 STANDARD CHARACTER PATTERNS

Lower 4 Bits \ Upper 4 Bits	0000	0001	0010	0011	0100	0101	0110	0111	1000	1001	1010	1011	1100	1101	1110	1111
xxxx0000	CG RAM (1)															
xxxx0001	(2)															
xxxx0010	(3)															
xxxx0011	(4)															
xxxx0100	(5)															
xxxx0101	(6)															
xxxx0110	(7)															
xxxx0111	(8)															
xxxx1000	(1)															
xxxx1001	(2)															
xxxx1010	(3)															
xxxx1011	(4)															
xxxx1100	(5)															
xxxx1101	(6)															
xxxx1110	(7)															
xxxx1111	(8)															

Note: The character generator RAM is the RAM with which the user can rewrite character patterns by program.

13.0 PRECAUTION FOR USING LCM

1. When design the product with this LCD Module, make sure the viewing angle matches to its purpose of usage.
2. As LCD panel is made of glass substrate, Dropping the LCD module or banging it against hard objects may cause cracking or fragmentation. Especially at corners and edges.
3. Although the polarizer of this LCD Module has the anti-glare coating, always be careful not to scratch its surface. Use of a plastic cover is recommended to protect the surface of polarizer.
4. If the LCD module is stored at below specified temperature, the LC material may freeze and be deteriorated. If it is stored at above specified temperature, the molecular orientation of the LC material may change to Liquid state and it may not revert to its original state. Excessive temperature and humidity could cause polarizer peel off or bubble. Therefore, the LCD module should always be stored within specified temperature range.
5. Saliva or water droplets must be wiped off immediately as those may leave stains or cause color changes if remained for a long time. Water vapor will cause corrosion of ITO electrodes.
6. If the surface of LCD panel needs to be cleaned, wipe it swiftly with cotton or other soft cloth. If it is not still clean enough, blow a breath on the surface and wipe again.
7. The module should be driven according to the specified ratings to avoid malfunction and permanent damage. Applying DC voltage cause a rapid deterioration of LC material. Make sure to apply alternating waveform by continuous application of the M signal. Especially the power ON/OFF sequence should be kept to avoid latch-up of driver LSIs and DC charge up to LCD panel.
8. Mechanical Considerations
   a) LCM are assembled and adjusted with a high degree of precision. Avoid excessive shocks and do not make any alterations or modifications. The following should be noted.
   b) Do not tamper in any way with the tabs on the metal frame.
   c) Do not modify the PCB by drilling extra holes, changing its outline, moving its components or modifying its pattern.
   d) Do not touch the elastomer connector; especially insert a backlight panel (for example, EL).
   e) When mounting a LCM makes sure that the PCB is not under any stress such as bending or twisting. Elastomer contacts are very delicate and missing pixels could result from slight dislocation of any of the elements.
   f) Avoid pressing on the metal bezel, otherwise the elastomer connector could be deformed and lose contact, resulting in missing pixels.
9. Static Electricity
   a) Operator

Ware the electrostatics shielded clothes because human body may be statically charged if not ware shielded clothes. Never touch any of the conductive parts such as the LSI pads; the copper leads on the PCB and the interface terminals with any parts of the human body.

   b) Equipment

There is a possibility that the static electricity is charged to the equipment, which has a function of peeling or friction action (ex: conveyer, soldering iron, working table). Earth the equipment through proper resistance (electrostatic earth: $1x10^8$ ohm).
Only properly grounded soldering irons should be used.
If an electric screwdriver is used, it should be well grounded and shielded from commutator sparks.
The normal static prevention measures should be observed for work clothes and working benches; for the latter conductive (rubber) mat is recommended.

   c) Floor

Floor is the important part to drain static electricity, which is generated by operators or equipment.

There is a possibility that charged static electricity is not properly drained in case of insulating floor. Set the electrostatic earth (electrostatic earth: $1x10^8$ ohm).

   d) Humidity

Proper humidity helps in reducing the chance of generating electrostatic charges. Humidity should be kept over 50%RH.

   e) Transportation/storage

The storage materials also need to be anti-static treated because there is a possibility that the human body or storage materials such as containers may be statically charged by friction or peeling.

The modules should be kept in antistatic bags or other containers resistant to static for storage.

   f) Soldering

Solder only to the I/O terminals. Use only soldering irons with proper grounding and no leakage.
Soldering temperature : 280° C ± 10° C

Soldering time: 3 to 4 sec.
Use eutectic solder with resin flux fill.
If flux is used, the LCD surface should be covered to avoid flux spatters. Flux residue should be removed afterwards.

g) Others

The laminator (protective film) is attached on the surface of LCD panel to prevent it from scratches or stains. It should be peeled off slowly using static eliminator.

Static eliminator should also be installed to the workbench to prevent LCD module from static charge.

10. Operation
    a) Driving voltage should be kept within specified range; excess voltage shortens display life.
    b) Response time increases with decrease in temperature.
    c) Display may turn black or dark blue at temperatures above its operational range; this is (however not pressing on the viewing area) may cause the segments to appear “fractured”.
    d) Mechanical disturbance during operation (such as pressing on the viewing area) may cause the segments to appear “fractured”.
11. If any fluid leaks out of a damaged glass cell, wash off any human part that comes into contact with soap and water. The toxicity is extremely low but caution should be exercised at all the time.
12. Disassembling the LCD module can cause permanent damage and it should be strictly avoided.
13. LCD retains the display pattern when it is applied for long time (Image retention). To prevent image retention, do not apply the fixed pattern for a long time. Image retention is not a deterioration of LCD. It will be removed after display pattern is changed.
14. Do not use any materials, which emit gas from epoxy resin (hardener for amine) and silicone adhesive agent (dealcohol or deoxym) to prevent discoloration of polarizer due to gas.
15. Avoid the exposure of the module to the direct sunlight or strong ultraviolet light for a long time.

Unikeyic Electronics

Global Electronic Components Distributor

Click to view pricing, inventory, delivery, and lifecycle information:

American Zettler Displays:

ATM0430D12B-CTN ATM1010L19-CT ACM1601C-RN-GBH-G ATM0240B32 ATM0400D1 ATM0680L3B-CT ACM1602K-NLW-BBW AQM1264PB-NLW-BBW ATM0200B3 ATM0400D1K ATM0500D27-CT ATM1010L19 ACM2002E-FL-YTS-G ATM0231D2 ATM0350D2-T ATM0430D19A ATM0500D27K-T ATM0700D38B-CTN ATM1010M39 ACM1601H-RN-YBS ATM0177B3A-T ATM0700L74 ATM0499M1A ATM0700L61-CT ATM1010L19-T ATM1025L1-CT ATM1210L9 ATM0700H1 ATM1010M40 ATM0500M27K