General description

The TL431BMFDT is a three-terminal adjustable shunt regulator with guaranteed thermal stability over a full operation range. It features sharp turn-on characteristics, low temperature coefficient and low output impedance,which make it ideal substitute for Zener diode in applications such as switching power supply,charger and other adjustable regulators.

The output voltage of TL431BMFDT can be set to any value between V_{REF}(2.5V)and the corresponding maximum cathode voltage (36V).

The TL431BMFDT precision reference is offered in two voltage tolerance: 0.5%.

Features and benefits

- Programmable Precise Output Voltage from 2.5V to 36V
- High Stability under Capacitive Load
- Low Temperature Deviation: 4.5mV Typical
- Low Equivalent Full-range Temperature Coefficient with 20PPM/℃ Typical
- Sink Current Capacity from 1mA to 100mA
- Low Output Noise
- Wide Operating Range of -40 to +125°C
- Lead-Free Packages
- Lead-Free Packages, Available in “Green” Molding Compound

Applications

- Charger
- Voltage Adapter
- Switching Power Supply
- Graphic Card
- Precision Voltage Reference

Reference News

Pin Assignments	Marking
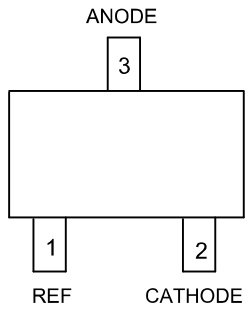	GA1

REELSPECIFICATION

P/N	PKG	QTY
TL431BMFDT	SOT-23	3000

Typical Applications Circuit

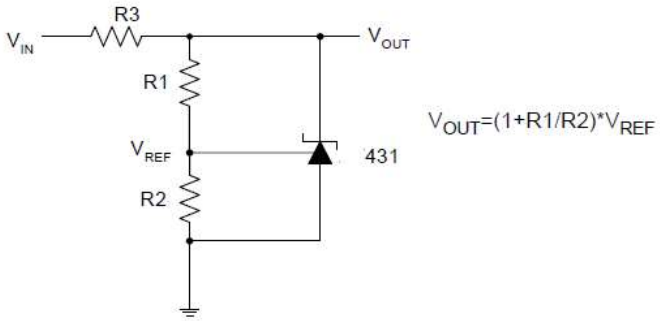

Shunt Regulator

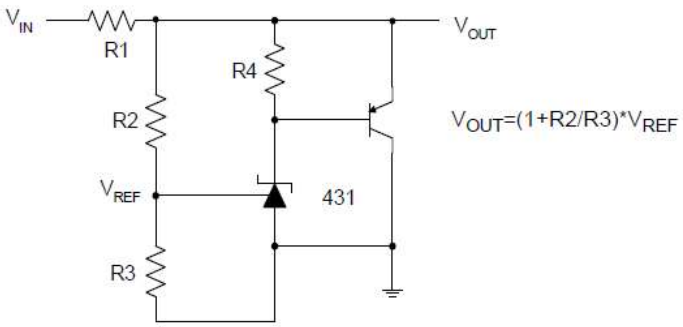

High Current Shunt Regulator

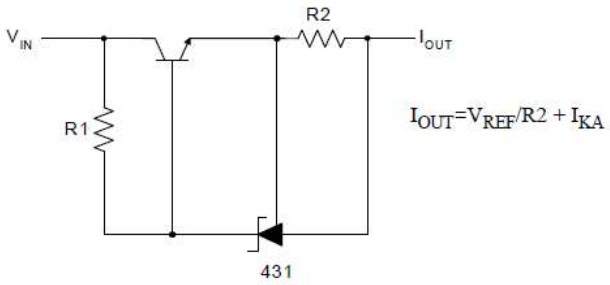

Current Source or Current Limit

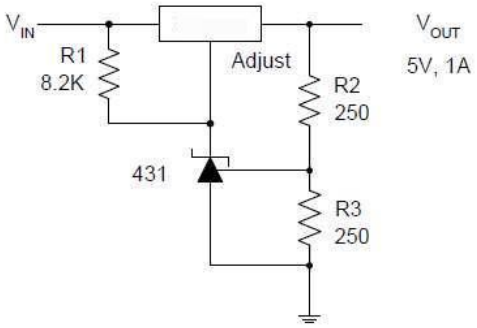

Precision 5V 1A Regulator

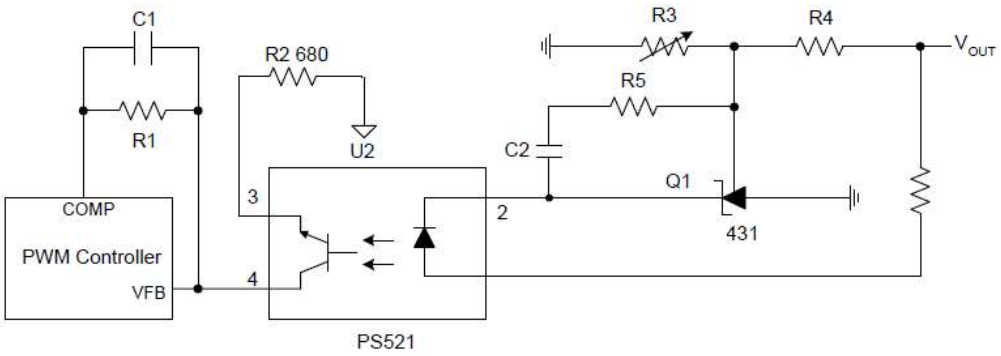

PWM Converter with Reference

Functional Block Diagram

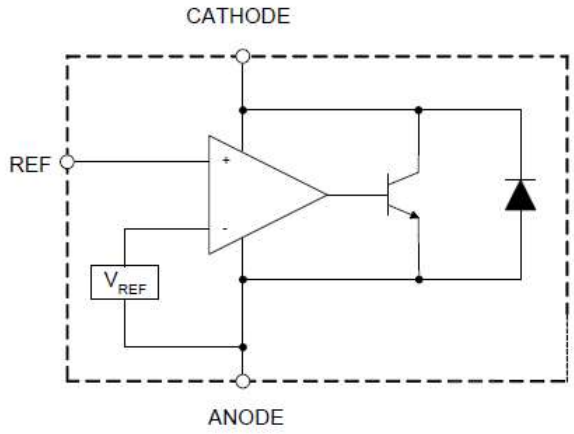

Absolute Maximum Ratings (Note 5)

Symbol	Parameter	Rating	Unit
V_{KA}	Cathode Voltage	40	V
I_{KA}	Cathode Current Range (Continuous)	-100 to 150	mA
I_{REF}	Reference Input Current Range	10	mA
P_D	Power Dissipation	770	mW
T_J	Junction Temperature	+125	°C
T_{STG}	Storage Temperature Range	-65 to +150	°C
ESD	ESD (Human Body Model)	2000	V

Note: 5. Stresses greater than those listed under "Absolute Maximum Ratings" may cause permanent damage to the device. These are stress ratings only, and functional operation of the device at these or any other conditions beyond those indicated under "Recommended Operating Conditions" is not implied. Exposure to "Absolute Maximum Ratings" for extended periods may affect device reliability.

Recommended Operating Conditions

Symbol	Parameter	Min	Max	Unit
V_{KA}	Cathode Voltage	V_{REF}	36	V
I_{KA}	Cathode Current	1.0	100	mA
T_A	Operating Ambient Temperature Range	-40	+125	°C

Electrical Characteristics (@T_A = +25°C, unless otherwise specified.)

Symbol	Test Circuit	Parameter		Conditions		Min	Typ	Max	Unit
V_{REF}	4	Reference Voltage	0.5%	$V_{KA} = V_{REF}$, I_{KA} = 10mA		2.4875	2.500	2.5125	V
ΔV_{REF}	4	Deviation of Reference Voltage Over Full Temperature Range		$V_{KA} = V_{REF}$ I_{KA} = 10mA	0 to +70°C	–	4.5	8	mV
					-40 to +85°C	–	4.5	10	
					-40 to +125°C	–	4.5	16	
$\frac{\Delta V_{REF}}{\Delta V_{KA}}$	5	Ratio of Change in Reference Voltage to the Change in Cathode Voltage		I_{KA} = 10mA	ΔV_{KA} = 10V to V_{REF}	–	-1.0	-2.7	mV/V
					ΔV_{KA} = 36V to 10V	–	-0.5	-2.0	
I_{REF}	5	Reference Current		I_{KA} = 10mA, R1 = 10KΩ, R2 = ∞		–	0.7	4	μA
ΔI_{REF}	5	Deviation of Reference Current Over Full Temperature Range		I_{KA} = 10mA, R1 = 10KΩ R2 = ∞, T_A = -40 to +125°C		–	0.4	1.2	μA
I_{KA} (Min)	4	Minimum Cathode Current for Regulation		$V_{KA} = V_{REF}$		–	0.4	1.0	mA
I_{KA} (Off)	6	Off-state Cathode Current		V_{KA} = 36V, V_{REF} = 0		–	0.05	1.0	μA
Z_{KA}	4	Dynamic Impedance		$V_{KA} = V_{REF}$, I_{KA} = 1 to 100mA, f ≤ 1.0KHz		–	0.15	0.5	Ω
θ_{JC}	–	Thermal Resistance		SOT23		–	135.48	–	°C/W

Electrical Characteristics (Cont.)

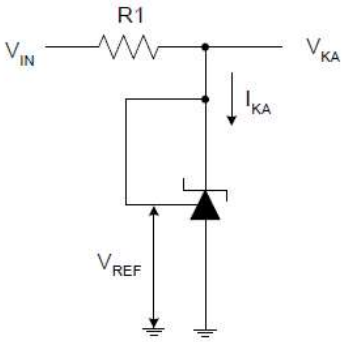

Test Circuit 4 for $V_{KA} = V_{REF}$

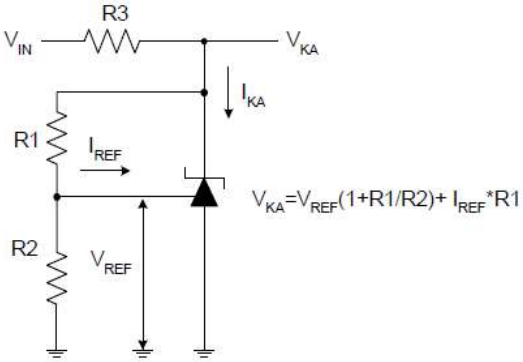

Test Circuit 5 for $V_{KA} > V_{REF}$

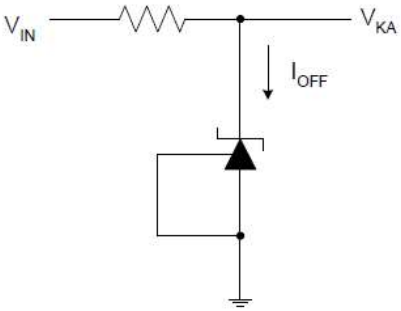

Test Circuit 6 for I_{OFF}

Performance Characteristics

Reference Voltage vs. Ambient Temperature

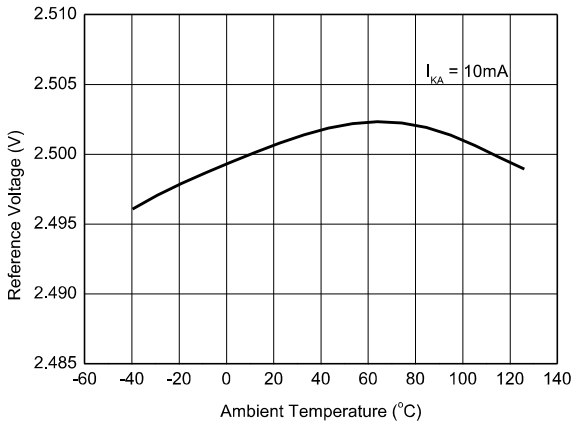

Reference Current vs. Ambient Temperature

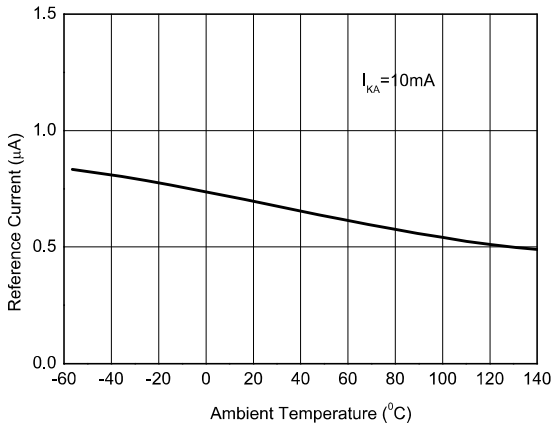

Cathode Current vs. Cathode Voltage

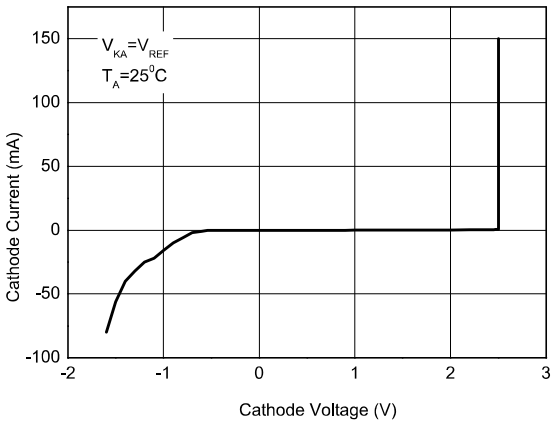

Cathode Current vs. Cathode Voltage

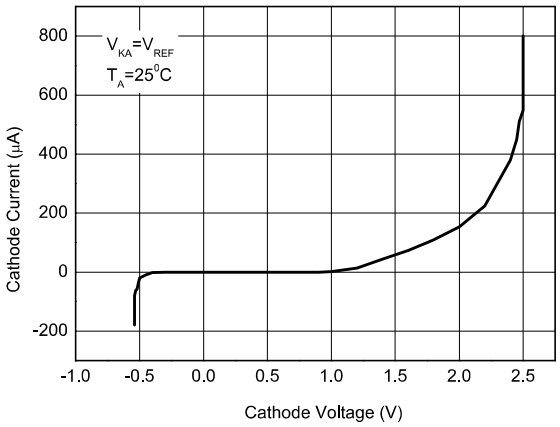

Off-State Cathode Current vs. Ambient Temperature

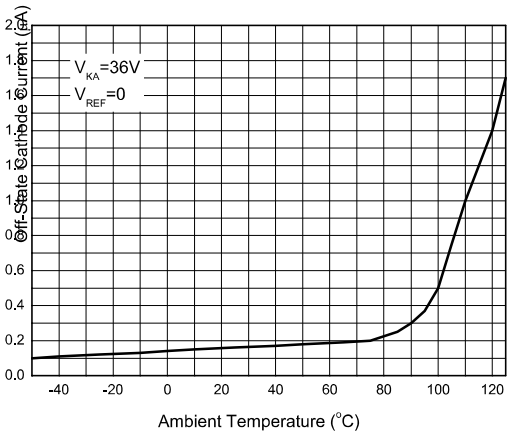

Ratio of Delta Reference Voltage to the Ratio of Delta Cathode Voltage

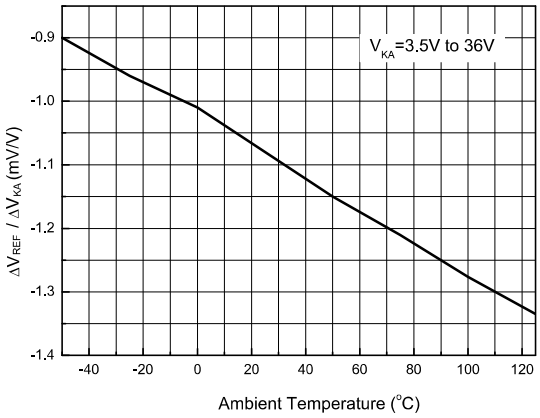

Performance Characteristics(Cont.)

Small Signal Voltage Gain vs. Frequency

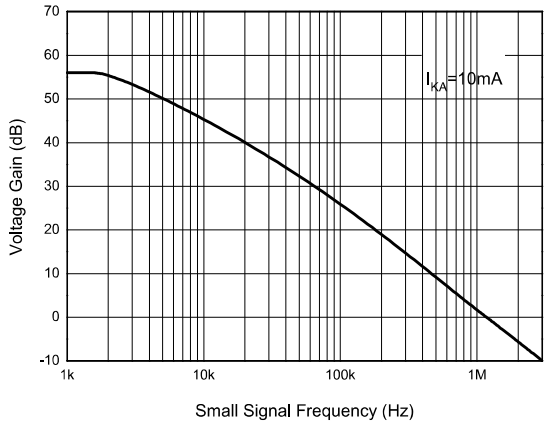

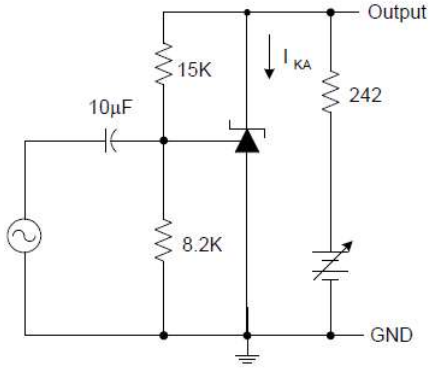

Reference Impedance vs. Frequency

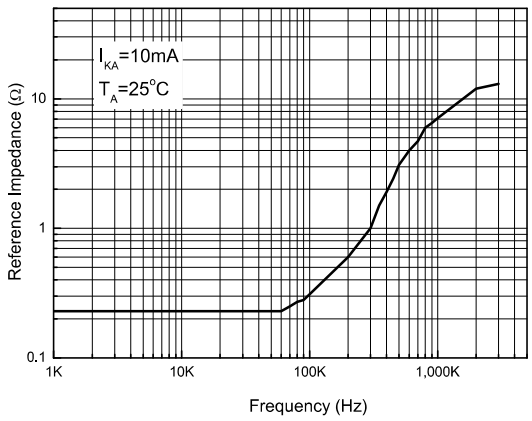

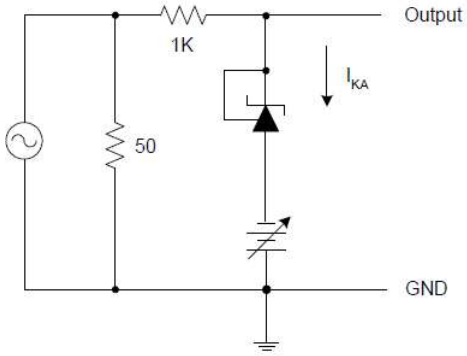

Stability Boundary Conditions vs. Load Capacitance

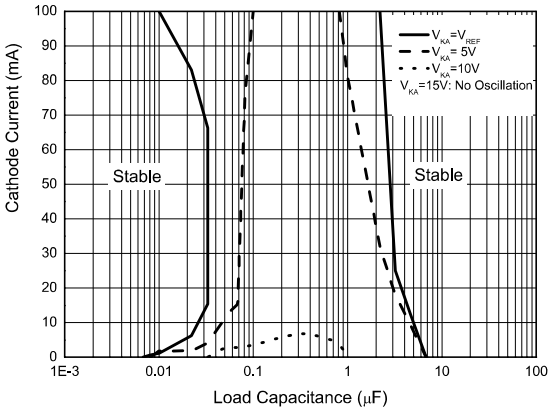

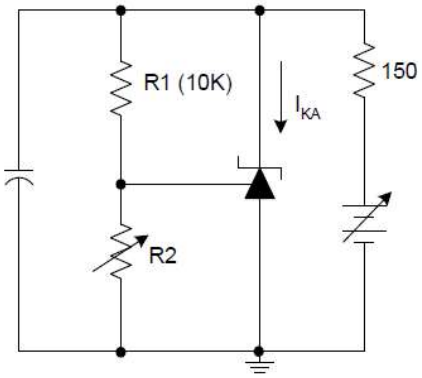

Performance Characteristics (Cont.)

Pulse Response of Input and Output Voltage

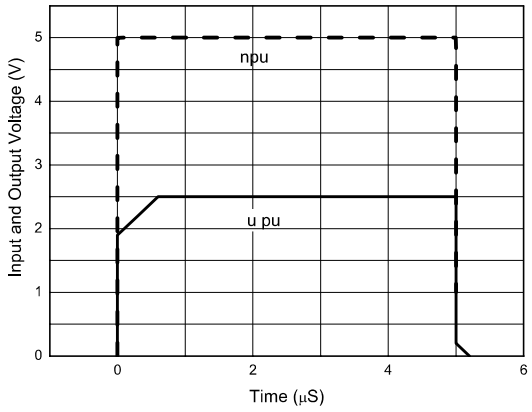

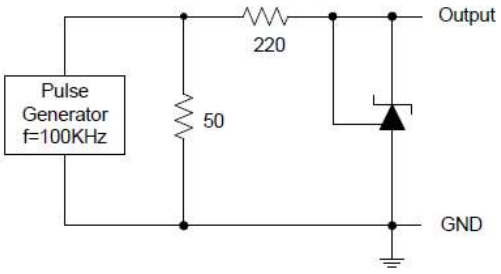

SOT-23 PACKAGE INFORMATION

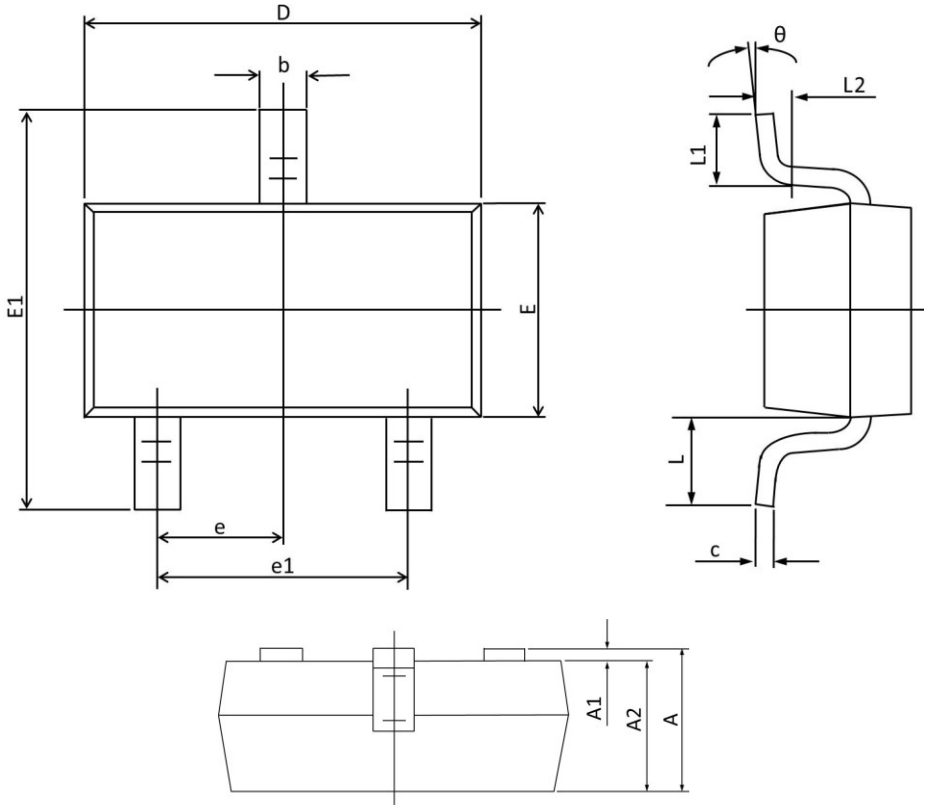

Symbol	DimensionsIn Millimeters		Dimensions In Inches	
	Max	Min	Max	Min
A	1.150	0.900	0.045	0.035
A1	0.100	0.000	0.004	0.000
A2	1.050	0.900	0.041	0.035
b	0.500	0.300	0.020	0.012
c	0.150	0.080	0.006	0.003
D	3.000	2.800	0.118	0.110
E	1.400	1.200	0.055	0.047
E1	2.550	2.250	0.100	0.089
e	0.95 TYP.		0.037 TYP.	
e1	2.000	1.800	0.079	0.071
L	0.55 REF.		0.022 REF.	
L1	0.500	0.300	0.020	0.012
L2	0.25 TYP.		0.01 TYP.	
θ	8°	0°	8°	0°