BZX584C SERIES

Surface mount Zener Diode

V_Z : 2.0 - 75 Volts
P_D : 150 mWatts



SOD-523

FEATURES

- Large selection of zener voltages: 2.0V ~ 75
- Tight voltage tolerance: ±5% for C-series
- Ultra low-profile package well suited for automated assembly
- MSL Class 1 compatible

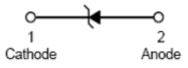

APPLICATIONS

- General voltage regulation
- Mobile & handheld systems

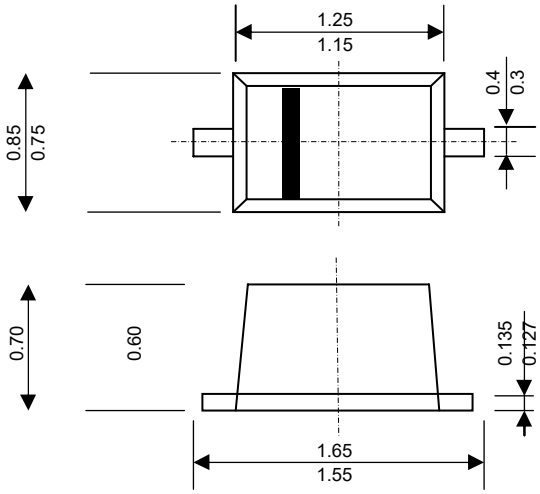

Dimensions in millimeters

ORDERING INFORMATION

Part Number	Marking	Package
BZX584C2V0 - BZX584C75	See Electrical Characteristics	SOD-523

MAXIMUM RATING (@ T_A = 25°C unless otherwise specified)

Parameter	Symbol	Value	Unit
Forward Voltage @ I_F=10mA	V_F	0.9	V
Power Dissipation (Collector)	P_C	150	mW
Thermal Resistance (Junction-to-Ambient)	$R_{\theta JA}$	834	°C/W
Junction Temperature Range	T_J	-55 ~ +150	°C
Storage Temperature Range	T_{STG}	-65 ~ +150	°C

Note: These ratings are limiting values above which the serviceability of the diodes may be impaired.

BZX584C SERIES

Surface mount Zener Diode

ELECTRICAL CHARACTERISTICS (@ T_A = 25°C unless otherwise specified)

Part Number	Marking Code	Zener Voltage V_Z (V)			@ I_{ZT} (mA)	Maximum Zener Impedance			Temperature Coefficient @ I_{ZT} T_C (mV/°C)		Maximum Reverse Current I_R (μA)	@ V_R (V)
		Min.	Typ.	Max.		Z_{ZT} (Ω) @ I_{ZT}	Z_{ZK} (Ω)	@ I_{ZK} (mA)	Min.	Max.		
BZX584C2V0	Z10	1.90	2.00	2.10	5	100	600	1.0	-3.5	0.0	150.000	1.0
BZX584C2V2	Z19	2.09	2.20	2.31	5	100	600	1.0	-3.5	0.0	150.000	1.0
BZX584C2V4	Z11	2.28	2.40	2.52	5	100	600	1.0	-3.5	0.0	50.000	1.0
BZX584C2V7	Z12	2.57	2.70	2.84	5	100	600	1.0	-3.5	0.0	20.000	1.0
BZX584C3V0	Z13	2.85	3.00	3.15	5	95	600	1.0	-3.5	0.0	10.000	1.0
BZX584C3V3	Z14	3.14	3.30	3.47	5	95	600	1.0	-3.5	0.0	5.000	1.0
BZX584C3V6	Z15	3.42	3.60	3.78	5	90	600	1.0	-3.5	0.0	5.000	1.0
BZX584C3V9	Z16	3.71	3.90	4.10	5	90	600	1.0	-3.5	0.0	3.000	1.0
BZX584C4V3	Z17	4.09	4.30	4.52	5	90	600	1.0	-3.5	0.0	3.000	1.0
BZX584C4V7	Z1	4.47	4.70	4.94	5	80	500	1.0	-3.5	0.2	3.000	2.0
BZX584C5V1	Z2	4.85	5.10	5.36	5	60	480	1.0	-2.7	1.2	2.000	2.0
BZX584C5V6	Z3	5.32	5.60	5.88	5	40	400	1.0	-2.0	2.5	1.000	2.0
BZX584C6V2	Z4	5.89	6.20	6.51	5	10	150	1.0	0.4	3.7	3.000	4.0
BZX584C6V8	Z5	6.46	6.80	7.14	5	15	80	1.0	1.2	4.5	2.000	4.0
BZX584C7V5	Z6	7.13	7.50	7.88	5	15	80	1.0	2.5	5.3	1.000	5.0
BZX584C8V2	Z7	7.79	8.20	8.61	5	15	80	1.0	3.2	6.2	0.700	5.0
BZX584C9V1	Z8	8.65	9.10	9.56	5	15	100	1.0	3.8	7.0	0.500	6.0
BZX584C10	Z9	9.50	10.00	10.50	5	20	150	1.0	4.5	8.0	0.200	7.0
BZX584C11	Y1	10.45	11.00	11.55	5	20	150	1.0	5.4	9.0	0.100	8.0
BZX584C12	Y2	11.40	12.00	12.60	5	25	150	1.0	6.0	10.0	0.100	8.0
BZX584C13	Y3	12.35	13.00	13.65	5	30	170	1.0	7.0	11.0	0.100	8.0
BZX584C15	Y4	14.25	15.00	15.75	5	30	200	1.0	9.2	13.0	0.100	10.5
BZX584C16	Y5	15.20	16.00	16.80	5	40	200	1.0	10.4	14.0	0.100	11.2
BZX584C18	Y6	17.10	18.00	18.90	5	45	225	1.0	12.4	16.0	0.100	12.6
BZX584C20	Y7	19.00	20.00	21.00	5	55	225	1.0	14.4	18.0	0.100	14.0
BZX584C22	Y8	20.90	22.00	23.10	5	55	250	1.0	16.4	20.0	0.100	15.4
BZX584C24	Y9	22.80	24.00	25.20	5	70	250	1.0	18.4	22.0	0.100	16.8
BZX584C27	Y10	25.65	27.00	28.35	2	80	300	0.5	21.4	25.3	0.100	18.9
BZX584C30	Y11	28.50	30.00	31.50	2	80	300	0.5	24.4	29.4	0.100	21.0
BZX584C33	Y12	31.35	33.00	34.65	2	80	325	0.5	27.4	33.4	0.100	23.1
BZX584C36	Y13	34.20	36.00	37.80	2	90	350	0.5	30.4	37.4	0.100	25.2
BZX584C39	Y14	37.05	39.00	40.95	2	130	350	0.5	33.4	41.2	0.100	27.3
BZX584C43	Y15	40.85	43.00	45.15	2	150	375	0.5	10.0	12.0	0.100	30.1
BZX584C47	Y16	44.65	47.00	49.35	2	170	375	0.5	10.0	12.0	0.100	32.9
BZX584C51	Y17	48.45	51.00	53.55	2	180	400	0.5	10.0	12.0	0.100	35.7
BZX584C56	Y18	53.20	56.00	58.80	2	200	400	0.5	10.0	12.0	0.045	39.2
BZX584C62	Y19	58.90	62.00	65.10	2	215	423	0.5	10.0	12.0	0.045	43.4
BZX584C68	Y20	64.60	68.00	71.40	2	240	447	0.5	10.0	12.0	0.045	47.6
BZX584C75	Y21	71.25	75.00	78.75	2	255	470	0.5	10.0	12.0	0.045	52.5

TYPICAL CHARACTERISTICS (@ T_A = 25°C unless otherwise specified)

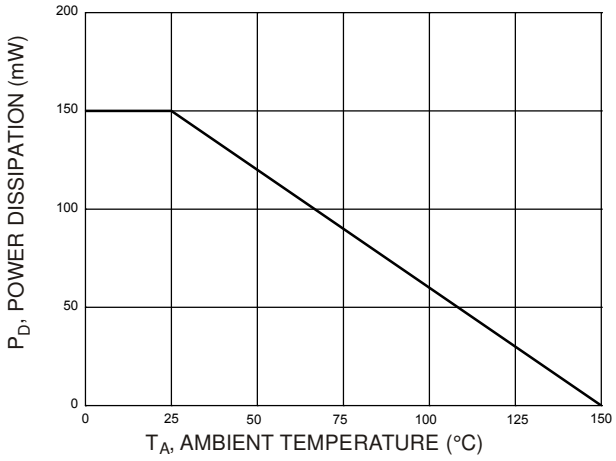

Fig. 1 Power Derating Curve

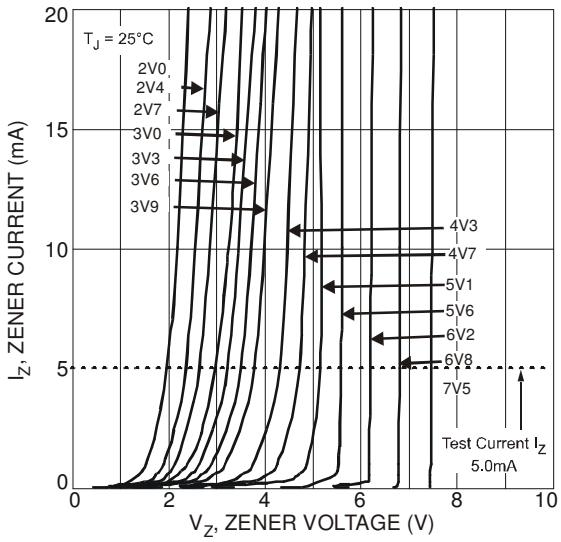

Fig. 2 Typical Zener Breakdown Characteristics

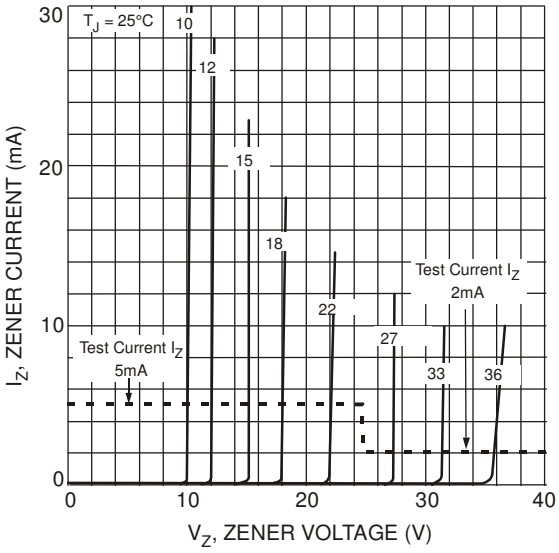

Fig. 3 Typical Zener Breakdown Characteristics

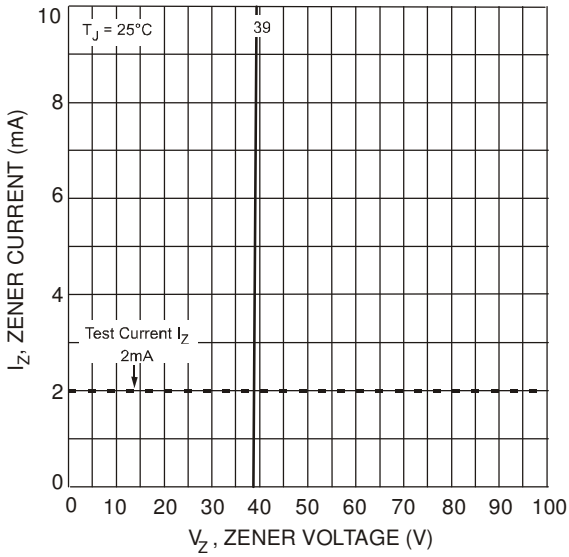

Fig. 4 Typical Zener Breakdown Characteristics

BZX584C SERIES

Surface mount Zener Diode

PACKAGE OUTLINE (Unit: mm)

Plastic surface mounted package

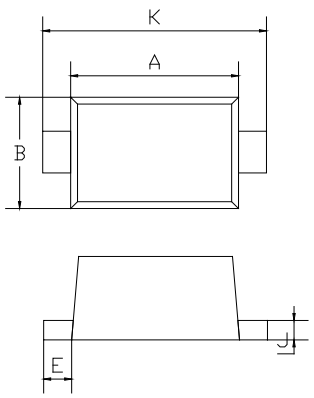

SOD-523		
Dimension	**Min.**	**Max.**
A	1.10	1.30
B	0.70	0.90
C	0.50	0.70
D	0.25	0.35
E	0.15	0.25
J	0.05	0.15
K	1.50	1.70

MOUNTING PAD LAYOUT (Unit: mm)

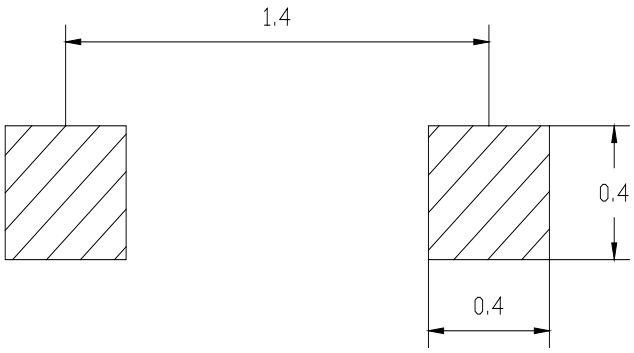

PACKAGE INFORMATION

Part Number	Package	Shipping Quantity
BZX584C2V0 - BZX584C75	SOD-523	3000pcs / Tape & Reel