TLVH431AIL3T

DATASHEET

Specification Revision History:

Version	Date	Description
V1.0	2019/04	New
V1.1	2021/08	Modify Ordering Information
V1.2	2025/02	Modify Ordering Information
V1.3	2025/03	Add application precautions and overall typesetting.

General Description

The TLVH431 is a low voltage three-terminal adjustable regulator with guaranteed thermal stability over applicable temperature ranges.The output voltage may be set to any value between VREF(approximately 1.25V)and 30V with two external resistors.This device has typical dynamic output impedance of 0.2Ω.Active output circuitry provides a very sharp turn-on characteristic,making these devices excellent replacement for zener diodes in many applications.

The TLVH431 is available in SOT23 package.

Features

※ Wide Programmable Precise Output Voltage from 1.25V to 30V
※ High Stability under Capacitive Load
※ Low Temperature Deviation:3mV Typical
※ High Sink Current Capacity from 55μAto 100mA
※ Low Dynamic Output Resistance:0.2Ω Typical
※ Low output noise

Application

※ Voltage Adapter
※ Switching Power Supply
※ PC Motherboard
※ Graphic Card
※ Charger



SOT-23

Ordering Information

Product Model	Package Type	Packing	Packing Qty
TLVH431AIL3T	SOT-23	REEL	3000PCS/REEL

Functional Block Diagram

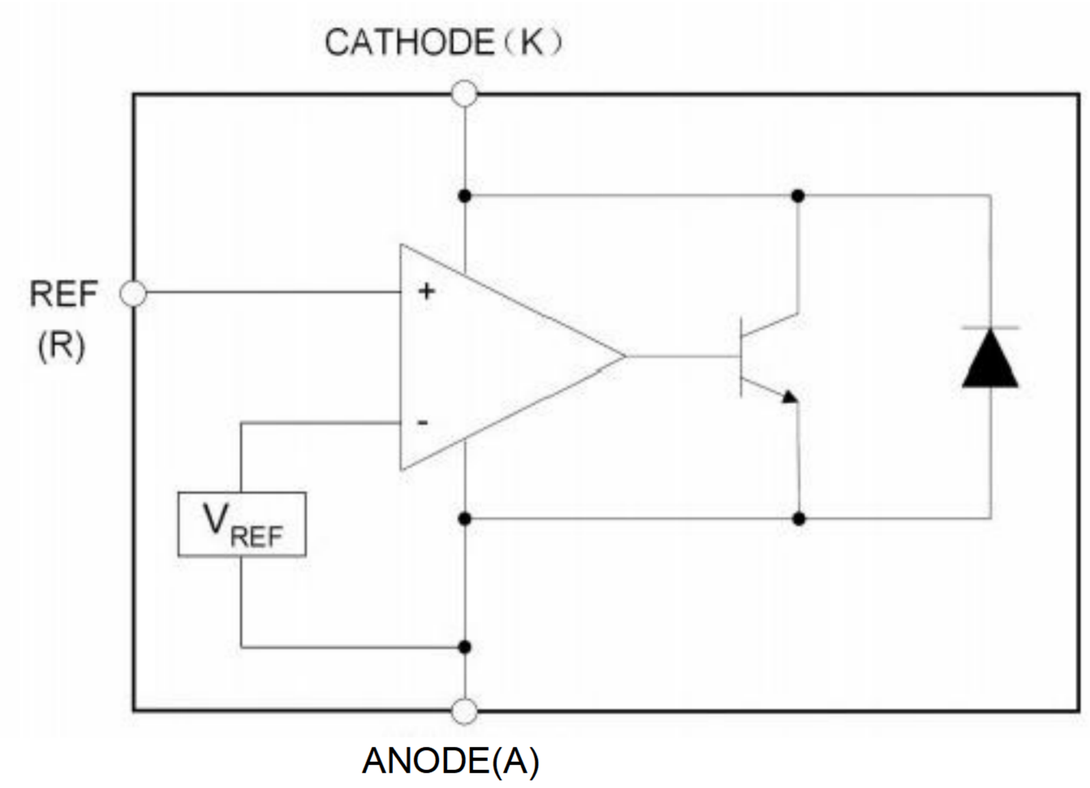

Pin Description (Top View)

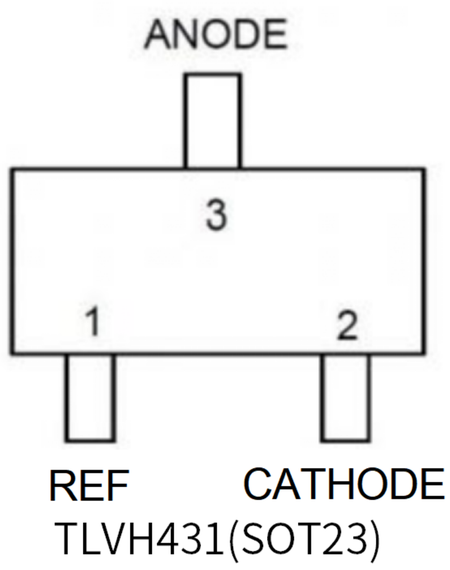

TLVH431(SOT23)

Absolute Maximum Ratings

(Operating temperature range applies unless otherwise specified.)

Parameter Name		Symbol	Value	Unit
Cathode Voltage		Vka	30	V
Reference Input Current Range		I_{REF}	10	mA
Power Dissipation	TO92	P_D	770	mW
	SOT23		230	
Store temperature Range		Tstg	-65~+150	°C
Package Thermal Impedance	TO92	θ_{JA}	130	°C/W
	SOT23		330	

Note: Stresses greater than those listed under "Absolute Maximum Ratings"may cause permanent damage to the device.These are stress ratings only,and functional operation of the device at these or any other conditions beyond those indicated under "Recommended Operating Conditions"is not implied.Exposure to "Absolute Maximum Ratings"for extended periods may affect device reliability.

Recommend Operating Conditions(Ta=25°C)

Parameter Name	Symbol	Min	Max	Unit
Cathode Voltage	Vka	Vref	30	V
Cathode Current	Ika	0.1	100	mA
Operating Ambient Temperature Range	Topr	-40	125	°C

Electrical Characteristics (Ta=25°C unless otherwise specified)

Parameter Name	Conditions		Symbol	Min	Typ	Max	Unit
Reference Voltage	$V_Z=V_{REF}$ Ii=10mA	±0.5%A	V_{REF}	1.244	1.250	1.256	V
		-1.0%～-0.5%B1		1.238		1.244	
		+0.5%～+1.0%B2		1.256		1.262	
		-2.0%～-1.0%C1		1.225		1.238	
		+1.0%～+2.0%C2		1.262		1.275	
Deviation of Reference Input Voltage Over Temperature	$V_Z=V_{REF}$, Ik=10mA	0～+70°C	$\triangle V_{REF}$		2.0	10.0	mV
		-40～+125°C		-	3.0	20.0	mV
RatiooftheChangeinReferenc VoltagetotheChangeinCathode Voltage	I_Z=10mA $V_Z=V_{REF}$~30V		$\triangle V_{REF}/\triangle V_Z$	-	-1.0	-2.7	mV/V
Reference Input Current	R1=10kΩ,R2=00 Ik=10mA		I_{REF}	-	0.15	0.50	μA
Deviation of Reference Input Current Over Temperature	R1=10kΩ,R2=o,Ik=10mA		$\triangle I_{REF}$	-	0.10	0.50	μA
Minimum Cathode Current for Regulation	$V_Z=V_{REF}$		$I_{Z(min)}$	-	20	80	μA
Off-State Current	V_Z=6V,V_{REF}=0V		$I_{Z(off)}$	-	0.01	0.05	μA
	V_Z=30V,V_{REF}=0V				0.04	0.15	μA
Dynamic Output Impedance	$V_Z=V_{REF}$,Ik=100μA to 100mA, f≤ 1.0kHz		Z_{KA}	-	0.20	0.40	Ω

Test Circuit

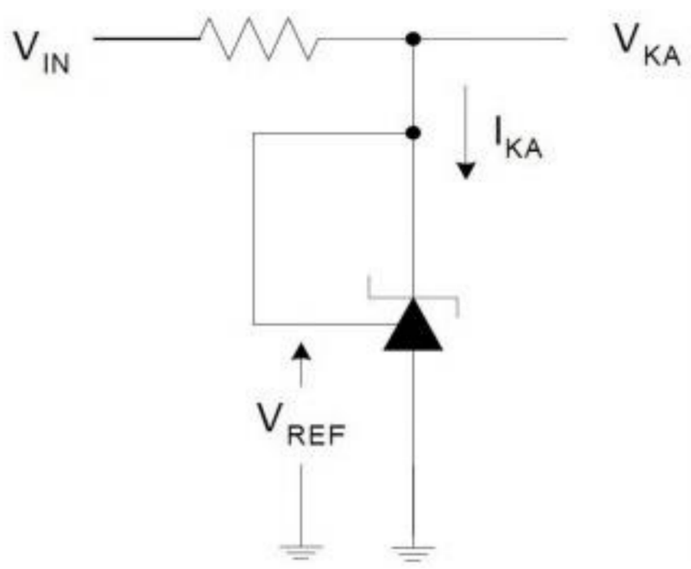

Fig1.Test circuit for Vz=VREF

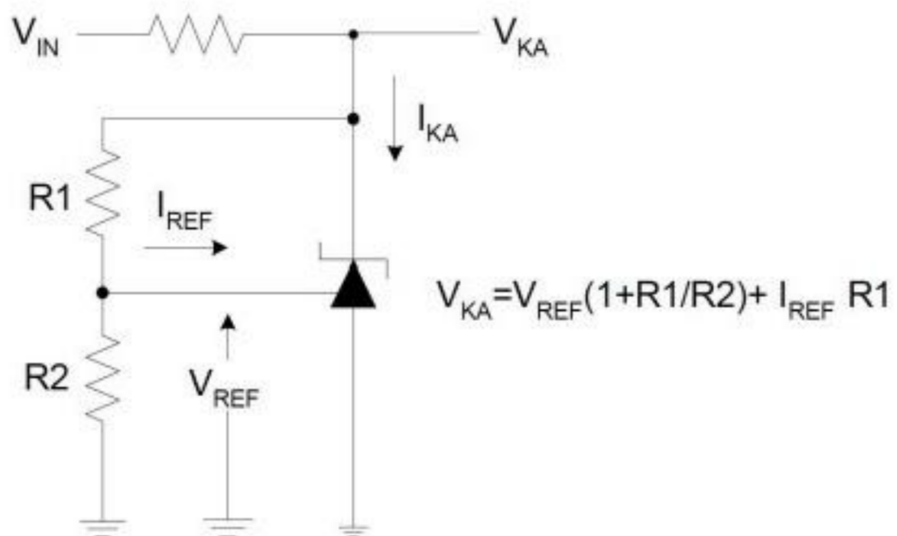

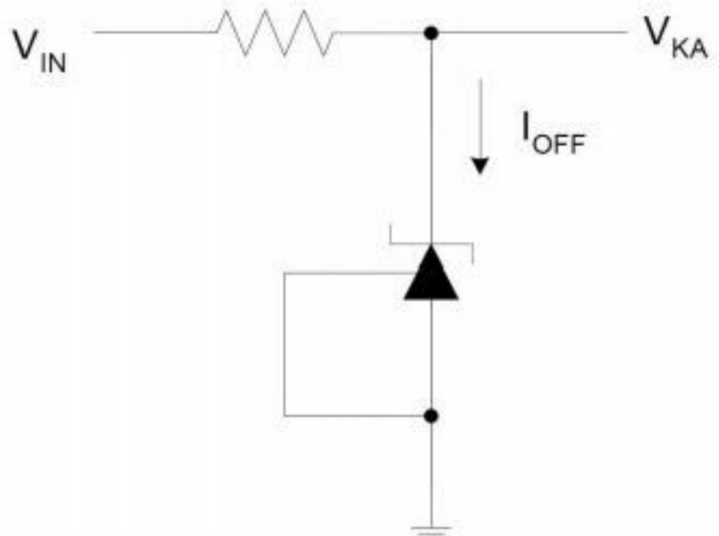

Fig2.Test circuit for Vz>VREF Fig3.Test circuit for off-state current

Characteristics Curves

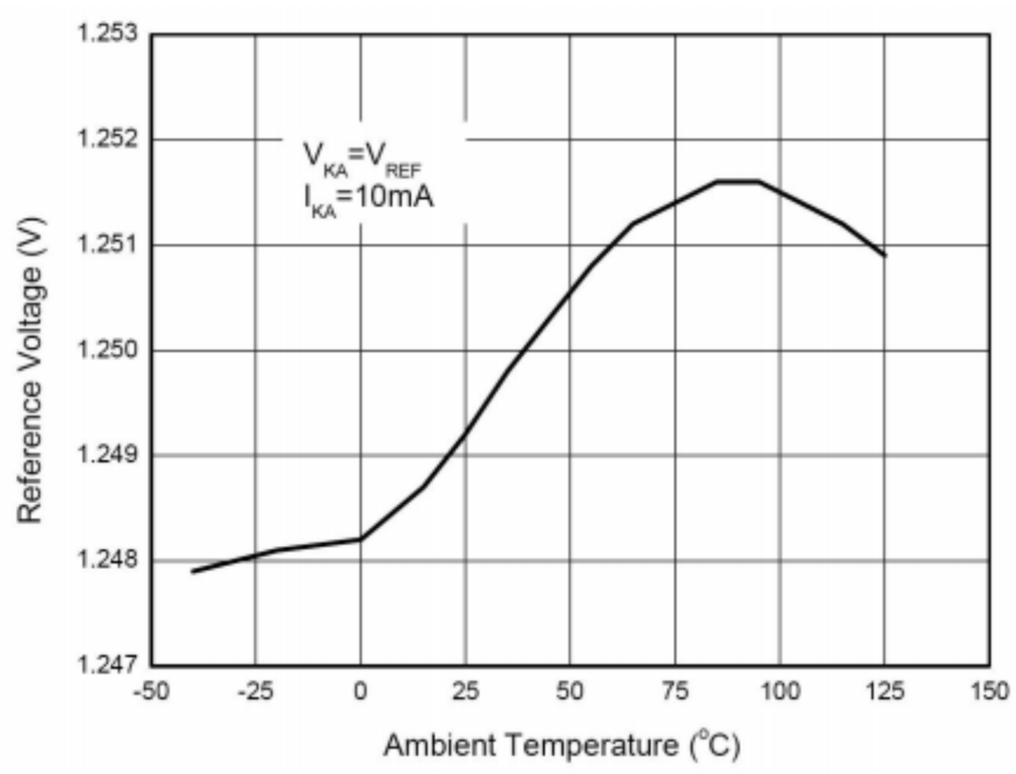

Fig4 Reference Voltage vs. Ambient Temperature

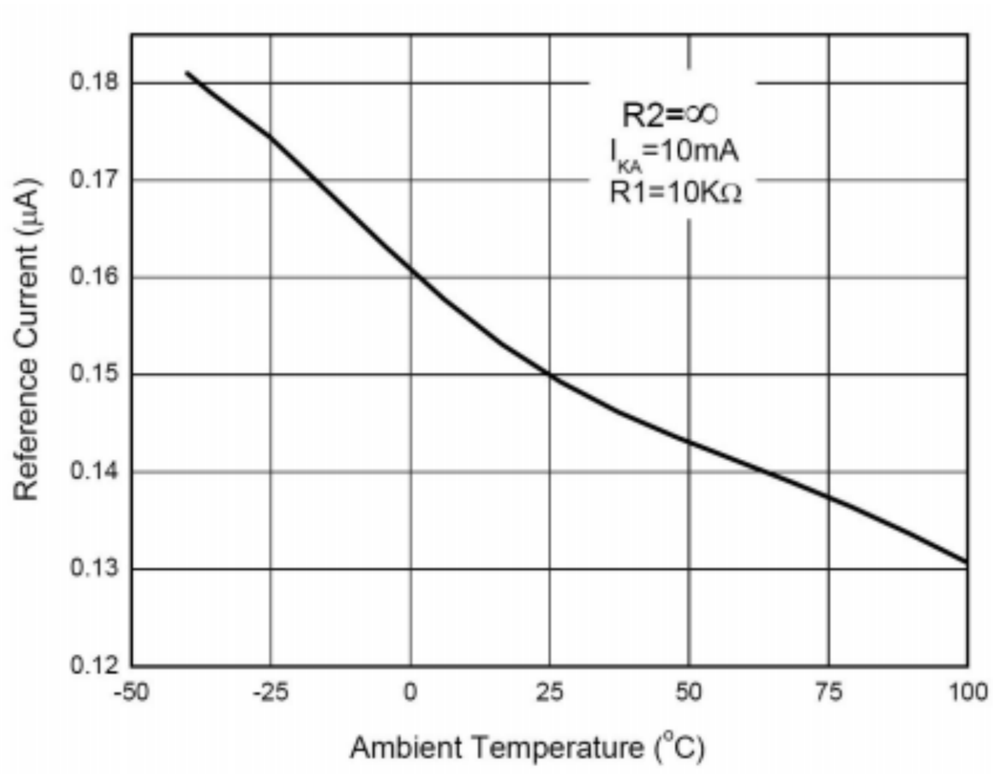

Fig5 Reference Current vs. Ambient Temperature

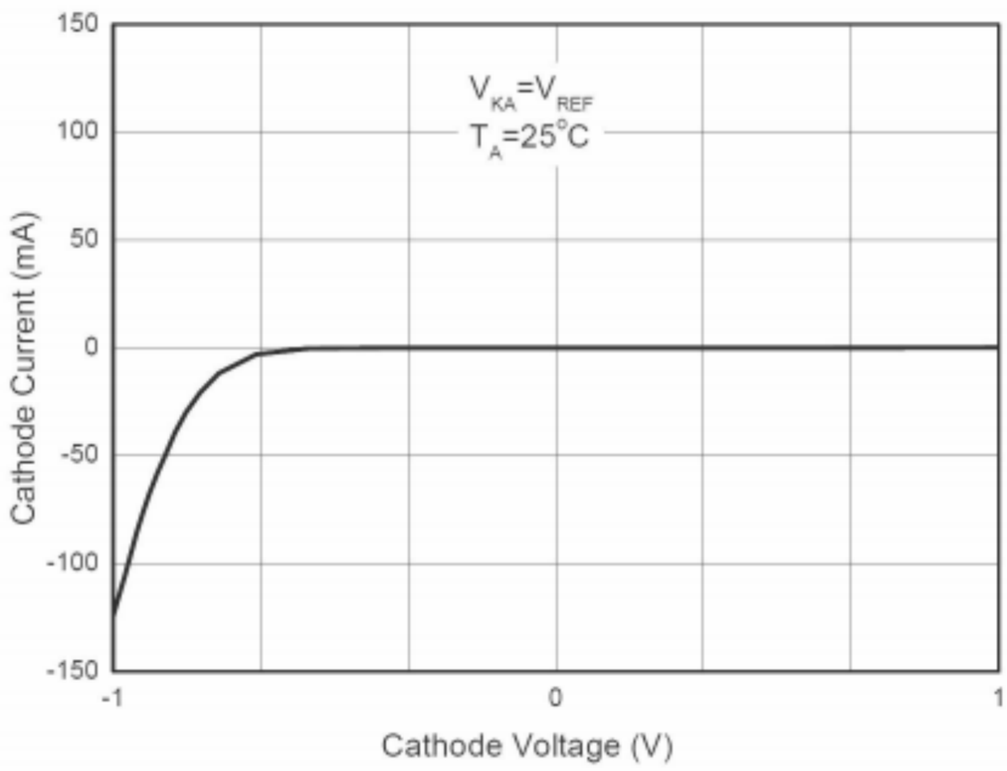

Fig6 Cathode Current vs. Cathode Voltage

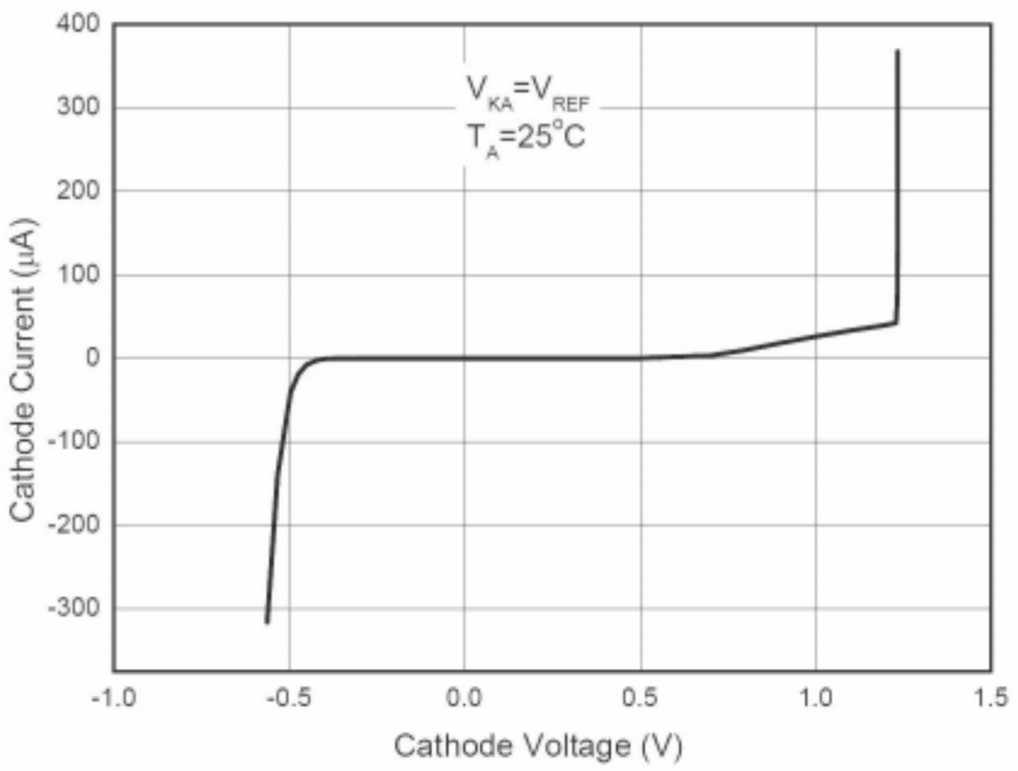

Fig7 Current vs. Cathode Voltage

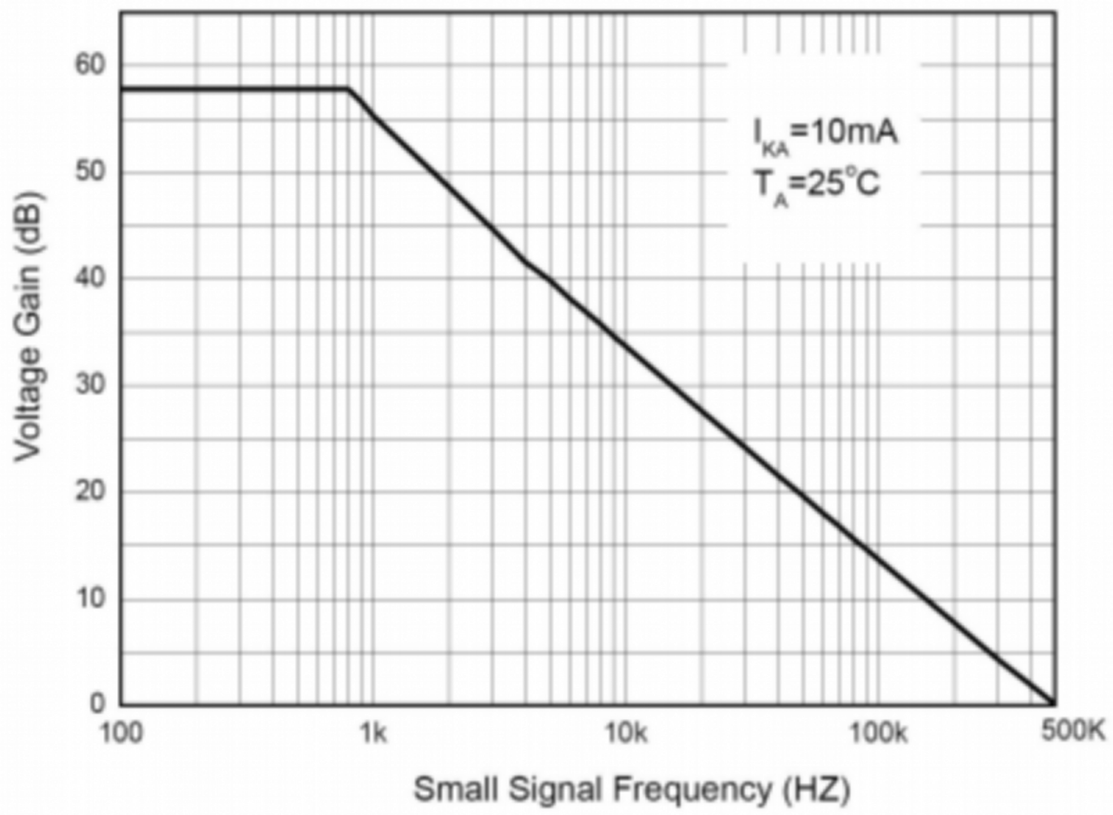

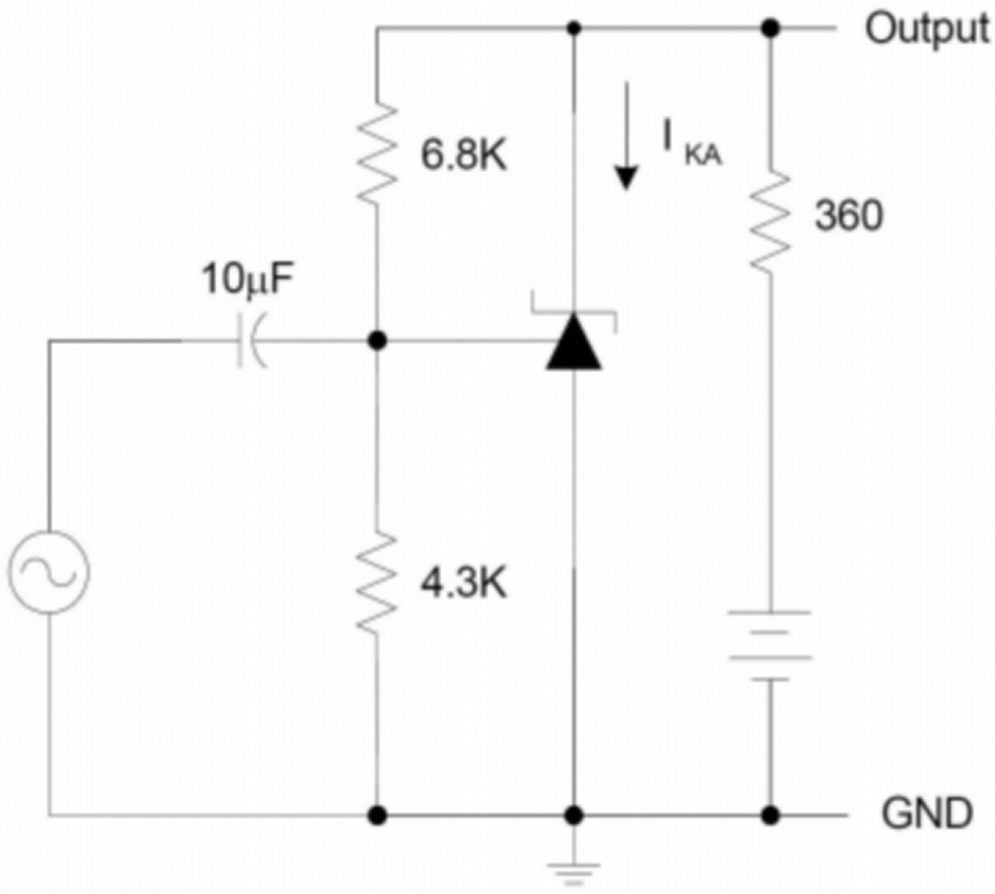

Fig8 Small Signal Voltage Gain vs. Frequency

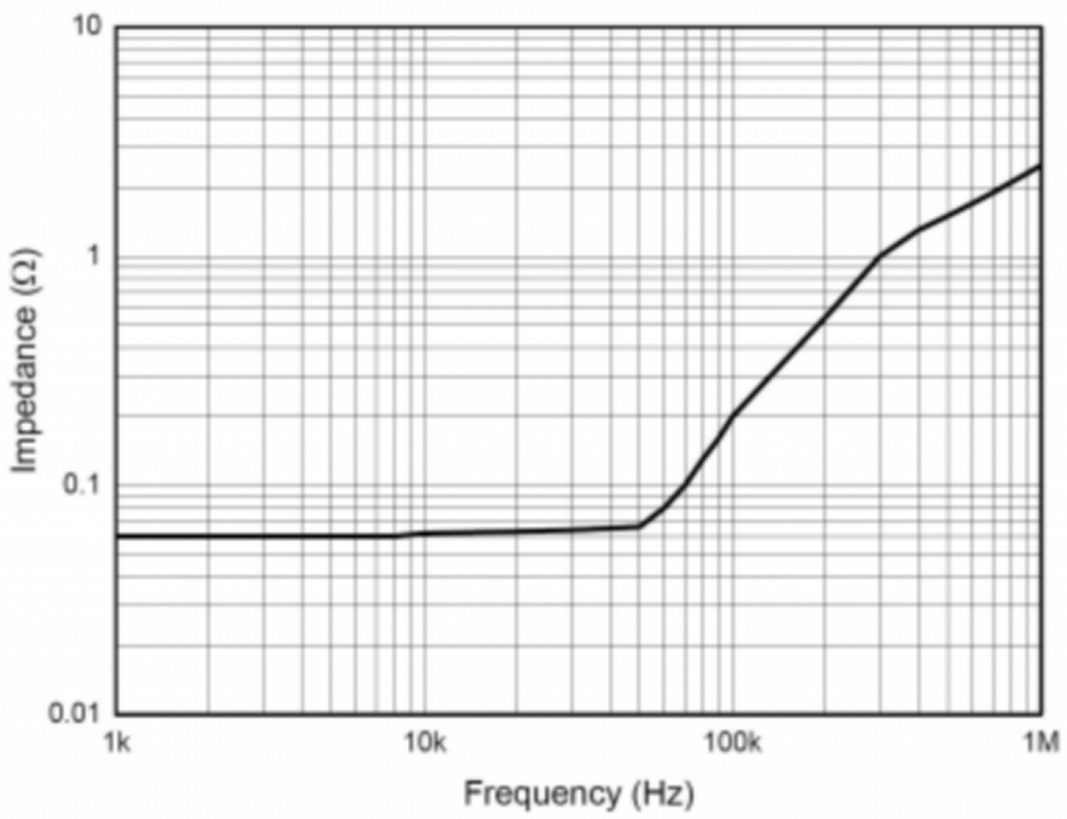

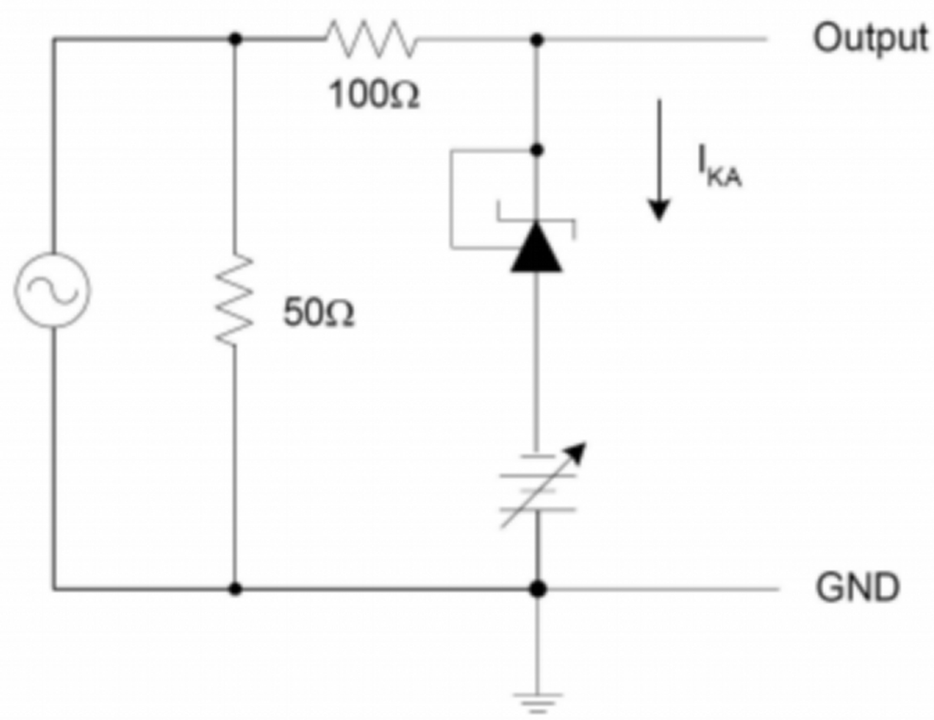

Fig9 Dynamic Impedance vs. Frequency

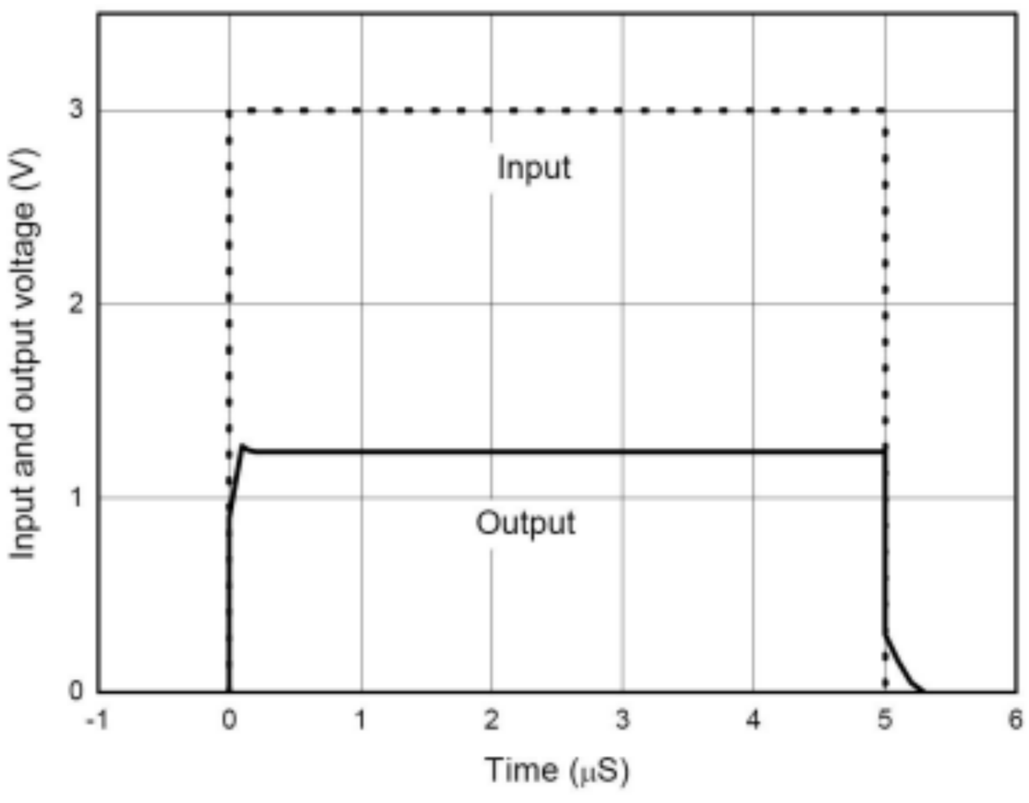

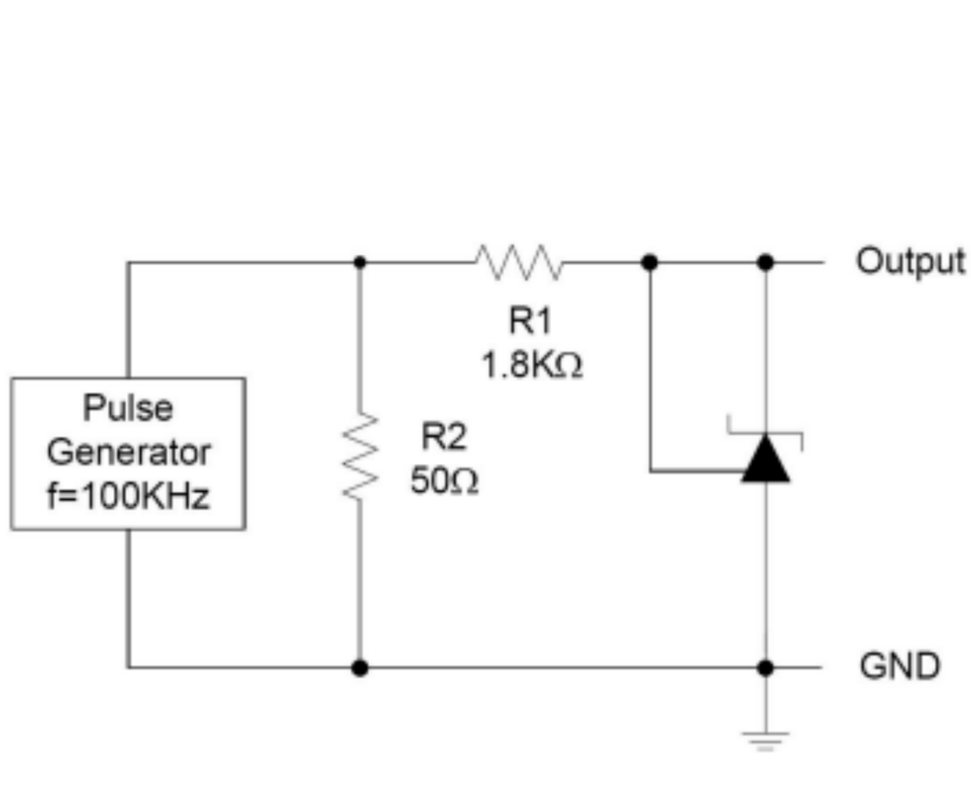

Fig10 Pulse Response of Input and Output Voltage

Application Circuit

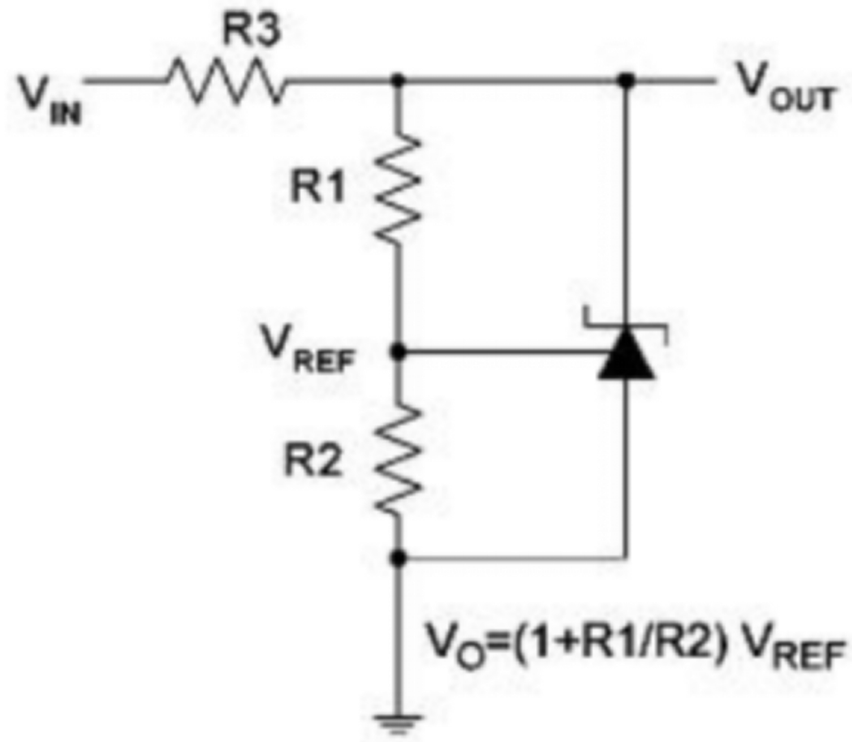

Shunt Regulator

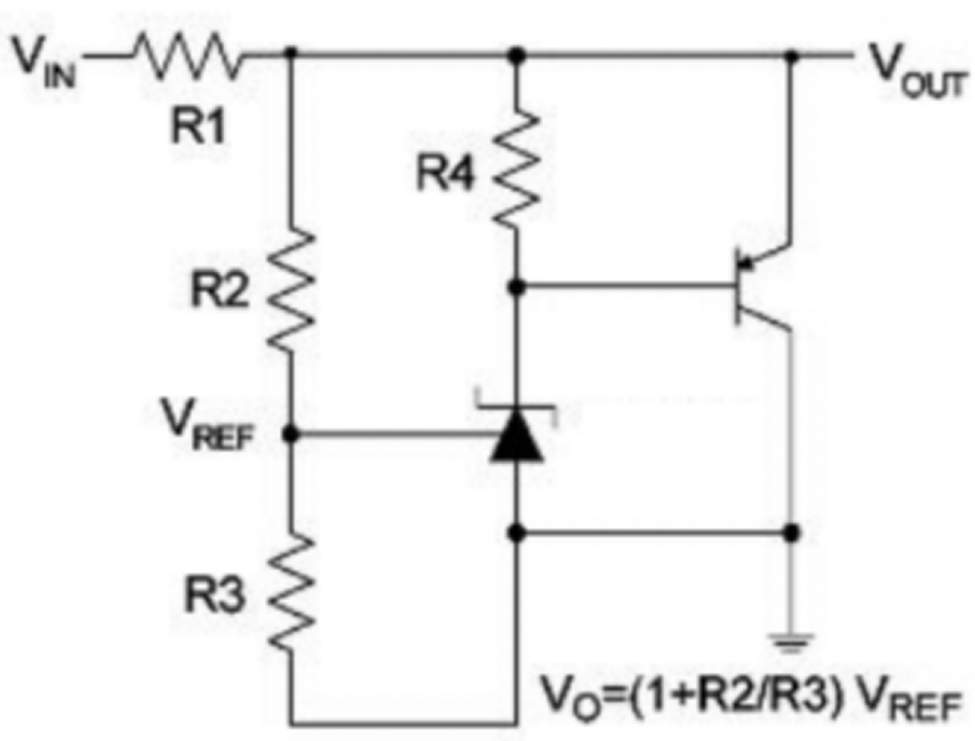

High Current Shunt Regulator

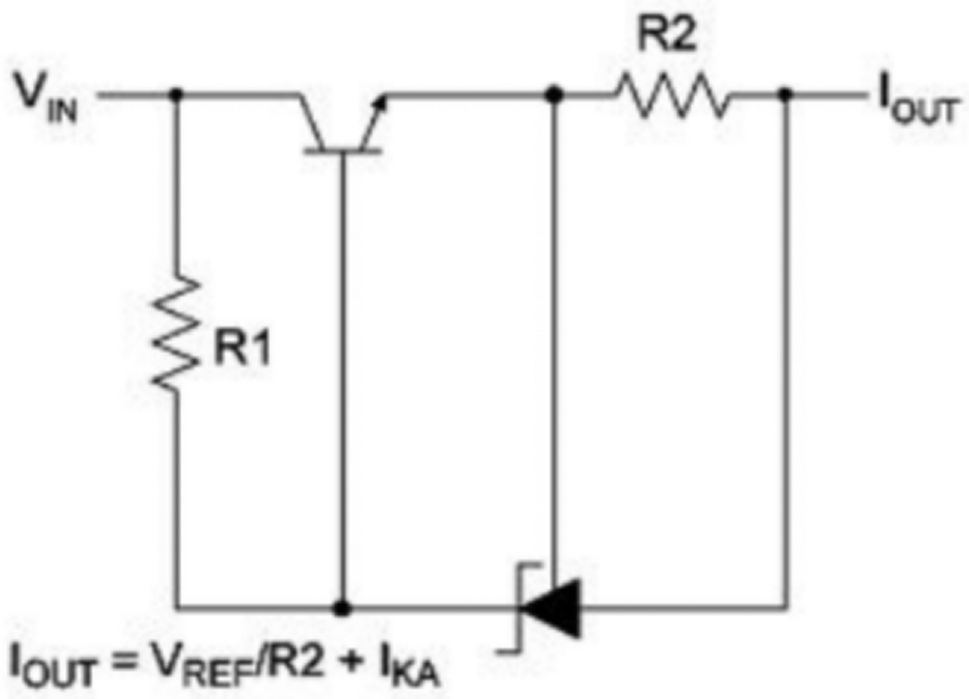

Current Source or Current Limit

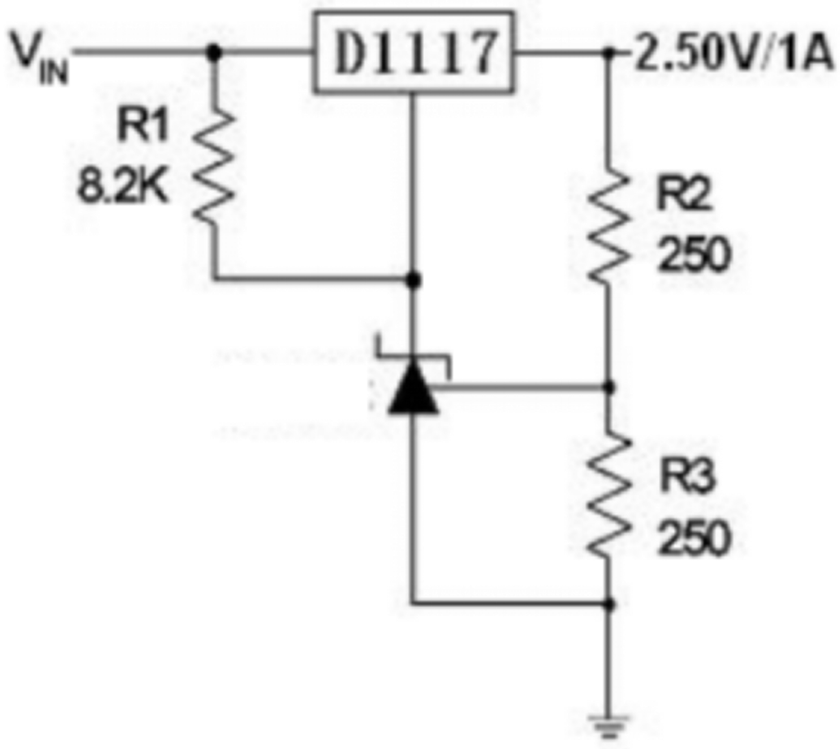

Precision 2.50V/1A Regulator

SOT23

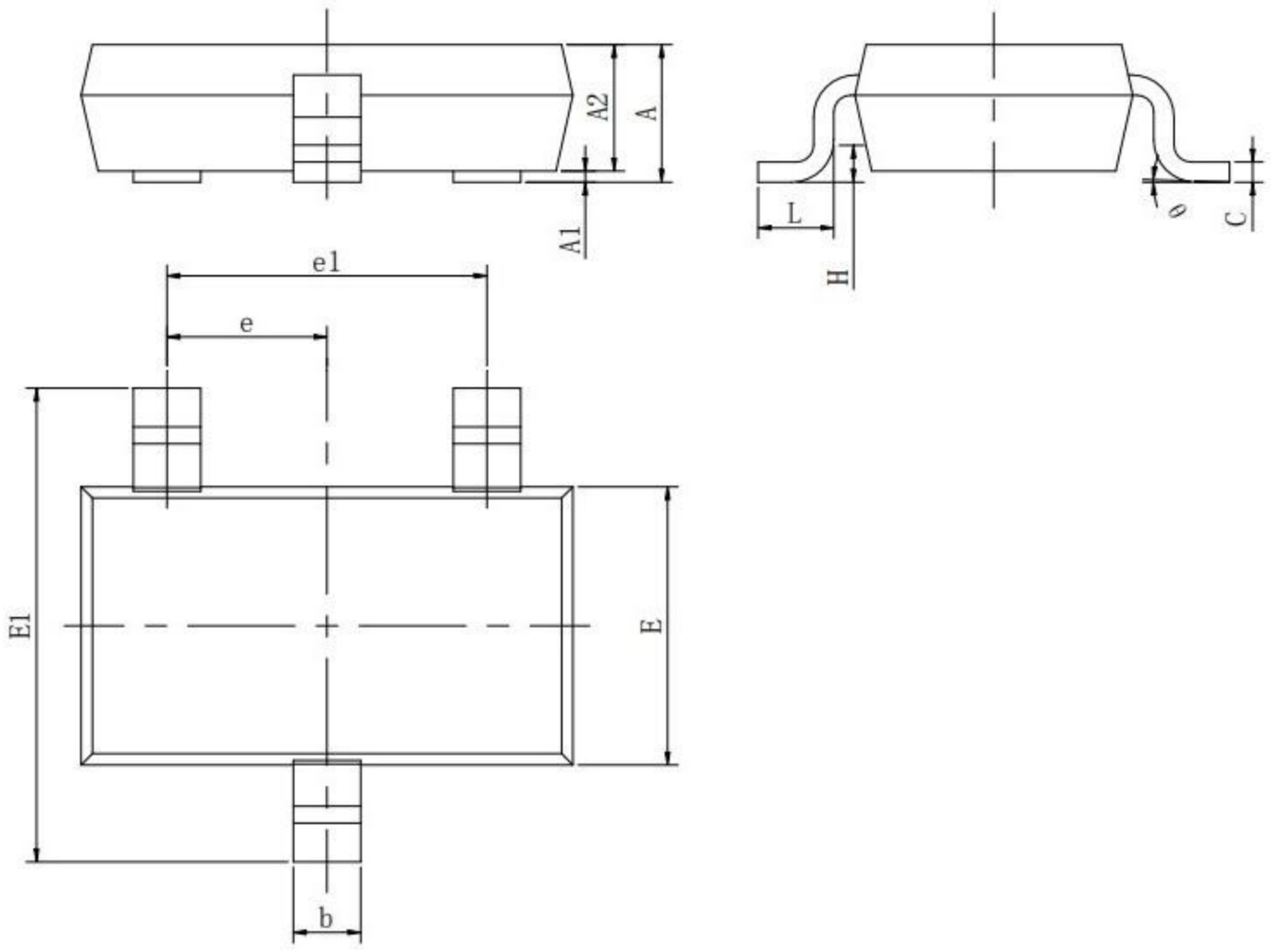

Symbol	Dimensions In Millimeters		Dimensions In Inches	
	Min	Max	Min	Max
A	0.900	1.150	0.035	0.045
A1	0.000	0.100	0.000	0.004
A2	0.900	1.050	0.035	0.041
b	0.300	0.500	0.012	0.020
C	0.080	0.200	0.003	0.008
D	2.800	3.020	0.110	0.119
E	1.200	1.400	0.047	0.055
E1	2.250	2.550	0.089	0.100
e	0.95(BSC)		0.037(BSC)	
el	1.90(BSC)		0.075(BSC)	
L	0.300	0.500	0.012	0.020
θ	0°	8°	0°	8°

Important Notice

- Green Micro chip reserves the right to change products and documents without notice. Customers should obtain and verify the completeness of the latest technical information before placing orders. Meanwhile, Green Micro chip shall not assume any responsibility or obligation for non-officially revised documents.

- Any parameters in the entire product specification are for reference only, and actual application testing shall prevail. When customers use the products for system design, they must comply with safety regulations and independently assume the following responsibilities: selecting suitable Green Micro chip products according to application requirements; completing design verification and full-link testing of the application; and ensuring that the application complies with safety regulations or other requirements of the target market. Customers shall bear all personal or property losses caused by design defects or illegal operations, which shall have no relation to Green Micro chip.

- Green Micro chip products are prohibited from being used in scenarios such as life support, military equipment, and key aerospace applications. All accidents and legal liabilities arising from out-of-scope use shall be borne by the user, and Green Micro chip shall not be held responsible.

- All technical resources of Green Micro chip (including data sheets and reference designs) are provided "as is", without guarantee of no defects or universality, and without any express or implied warranties. The documents are only authorized for product development and research described in this document. Unauthorized use of intellectual property, public reproduction, and reverse engineering are strictly prohibited. All claims and losses caused by illegal use shall be borne by the user, and Green Micro chip shall not be liable.