Solenoids

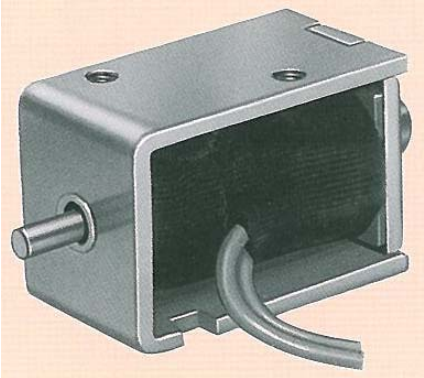

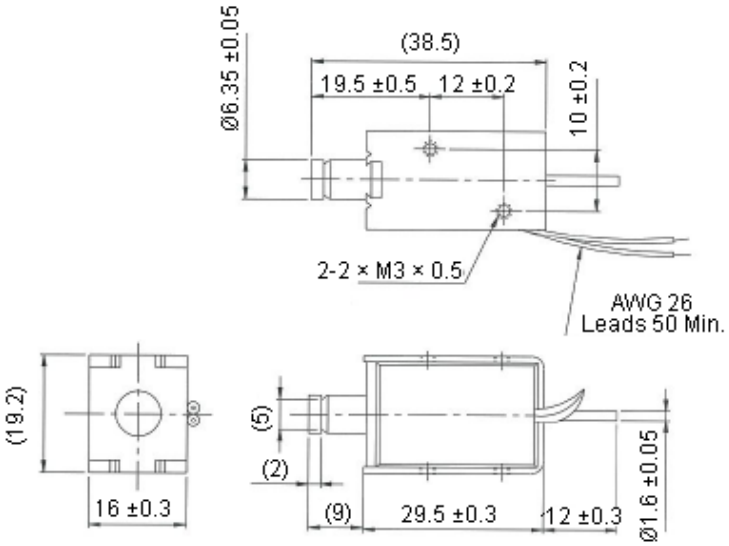

Plunger weight : 5 g
Total weight : 42 g

Dimensions : Inches (Millimetres)

Stroke Vs Force

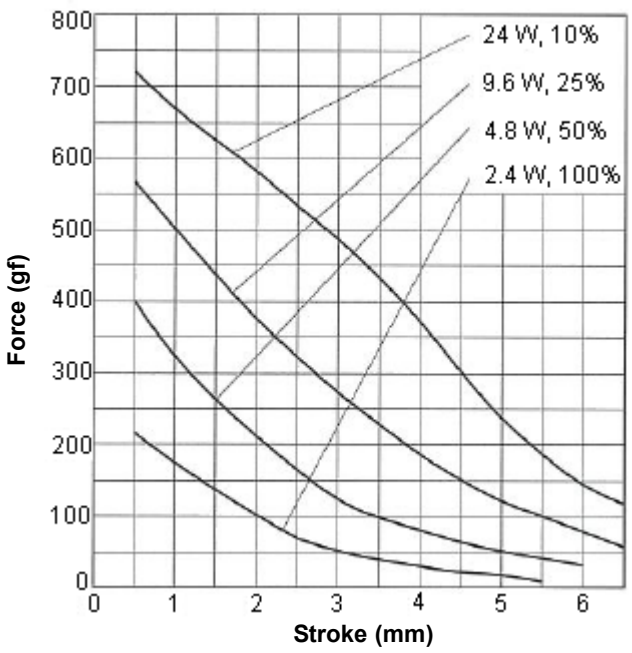

Ampere - Turns Vs Force

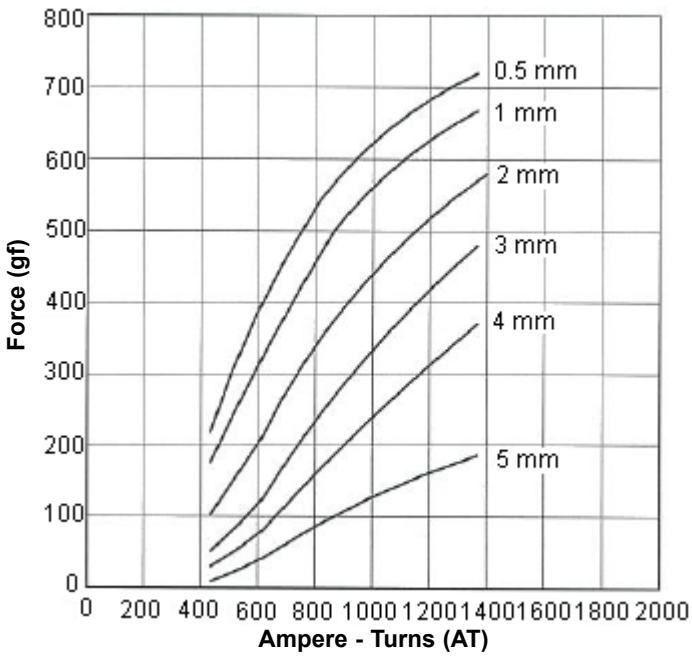

Coil Data

Duty Cycle (%) = $\frac{\text{“ON” Time}}{\text{“ON” Time + “OFF” Time}} \times 100\%$	Continuous (100%)	Or Less (50%)	Or Less (25%)	Or Less (10%)
Maximum “on” time seconds	∞	55	19	3
Watts at 20°C	2.4	4.8	9.6	24
Ampere - turns at 20°C	432	615	864	1,368

Specification Table

Description	Resistance (20°C) Ω ±10%	Number Turns	Volts DC				Part Number
Solenoid, Open Frame, Push, 6 V	15	1,080	6	8.5	12	19	MCSMO-0630S06STD
Solenoid, Open Frame, Push, 12 V	60	2,160	12	17	24	38	MCSMO-0630S12STD
Solenoid, Open Frame, Push, 24 V	240	4,320	24	34	48	76	MCSMO-0630S24STD

Important Notice : This data sheet and its contents (the "Information") belong to the members of the Premier Farnell group of companies (the "Group") or are licensed to it. No licence is granted for the use of it other than for information purposes in connection with the products to which it relates. No licence of any intellectual property rights is granted. The Information is subject to change without notice and replaces all data sheets previously supplied. The Information supplied is believed to be accurate but the Group assumes no responsibility for its accuracy or completeness, any error in or omission from it or for any use made of it. Users of this data sheet should check for themselves the Information and the suitability of the products for their purpose and not make any assumptions based on information included or omitted. Liability for loss or damage resulting from any reliance on the Information or use of it (including liability resulting from negligence or where the Group was aware of the possibility of such loss or damage arising) is excluded. This will not operate to limit or restrict the Group's liability for death or personal injury resulting from its negligence. Multicomp is the registered trademark of the Group. © Premier Farnell plc 2011.

Unikeyic Electronics

Global Electronic Components Distributor

Click to view pricing, inventory, delivery, and lifecycle information:

multicomp:

CMS-DF-1825 MC0402WGF499JTCE MC36427 MCSR08X3300FTL SMAJ160A-13-F CFS-TF-1818 MCMF0W4FF8202A50 MP006937 SPC19989 2213R-24G MC-SVT1-S06-G MCMET 800MA 250V MP005415 MUR1540 CF06332T/4/10 MC34747 MCSDRH73B-681MHF MP006964 MC0603B393K500CT MC34589 MCMR06X1004FTL MCMR08X2000FTL MCWF12R7150BTL MCWR08X39R0FTL MCLPR50V478M30X25 MCMR50V335M4X7 MCSDC0603-560KU MC0603N100F500CT MC0603N100J201CT MCAL0410A1-471KU