Toggle Switches

Specifications:

Electrical:

Maximum contact rating	: Silver : 5 A at 120 V ac or 28 V dc, 2 A at 250 V ac, F*
	: Gold : 0.4 VA at 20 V (ac or dc), G*
Maximum contact resistance	: 10 mΩ
Minimum insulation resistance	: 1,000 MΩ at 500 V dc
Dielectric strength	: 1,000 V rms

Mechanical:

Life	: 40,000 cycles

Environmental:

Operating temperature	: -30°C to +85°C

Material:

Case	: DAP
Housing	: Stainless steel
Actuator	: Brass, chrome plated
Bushing	: Brass, nickel plated
Support	: Brass, tin plated
Contact / Terminals	: Copper alloy, silver or gold plated

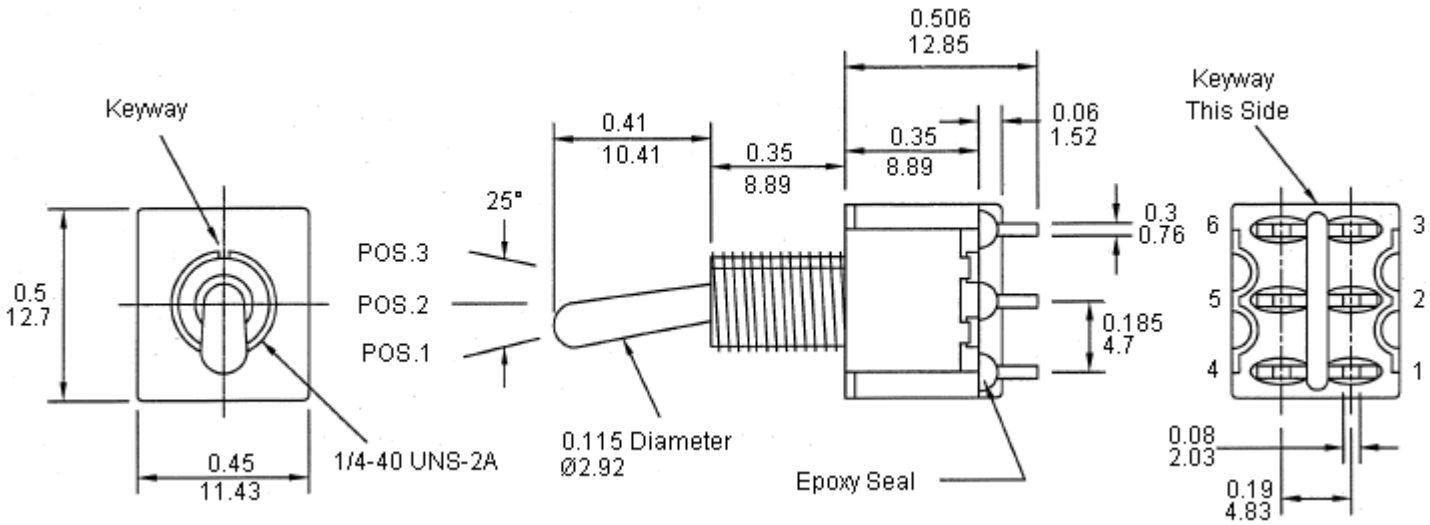

Dimensions : Inches (Millimetres)

Toggle Switches

Model No.	Switching Position		
			
A*	ON	NONE	ON
B*	ON	NONE	MOM
C*	ON	OFF	ON
D*	MOM	OFF	MOM
E*	ON	OFF	MOM
Conn. Terms	2-3 5-6	OPEN	2-1 5-4
Schematic	DPDT 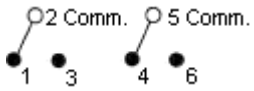		

For PC Mount Termination Only

PCB Layout
Component Side

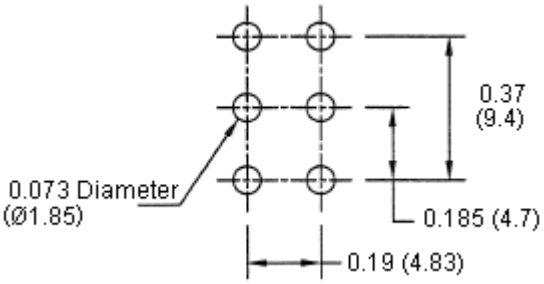

Dimensions : Inches (Millimetres)

Actuator Options

H*

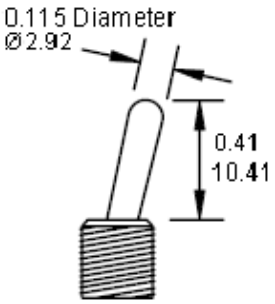

I*

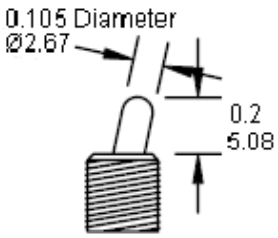

J*

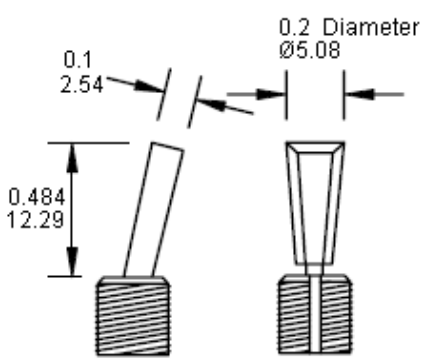

K*

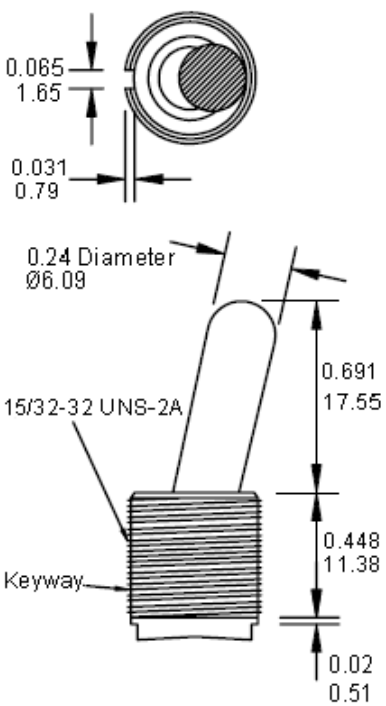

Bushing Options

L*

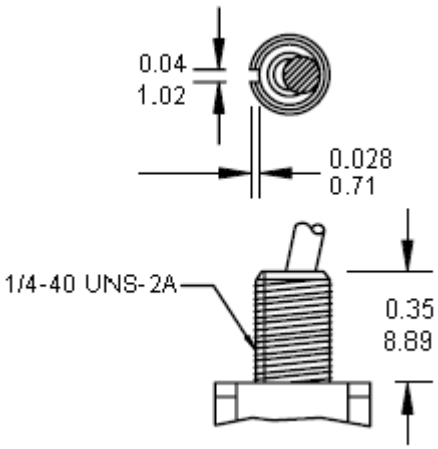

M*

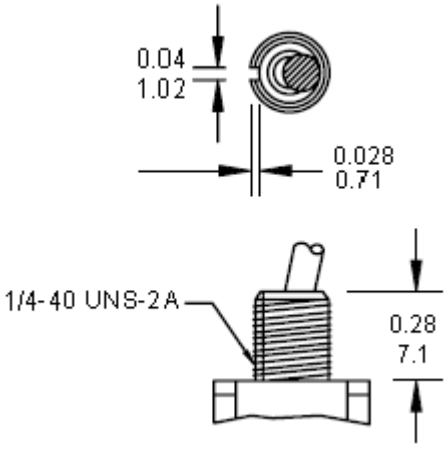

Dimensions : Inches (Millimetres)

Dimensions : Inches (Millimetres)

Bushing Options

N*

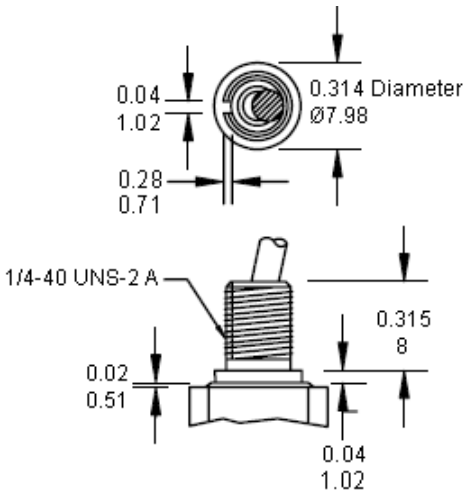

Termination Options

O*

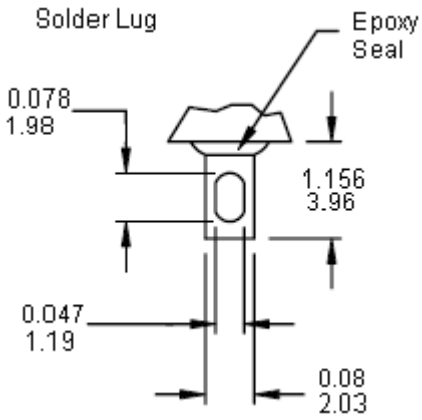

P*

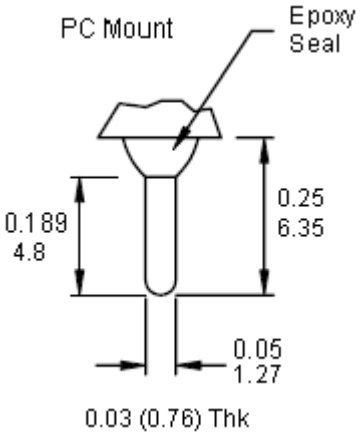

Dimensions : Inches (Millimetres)

Vertical Support Bracket

Q*

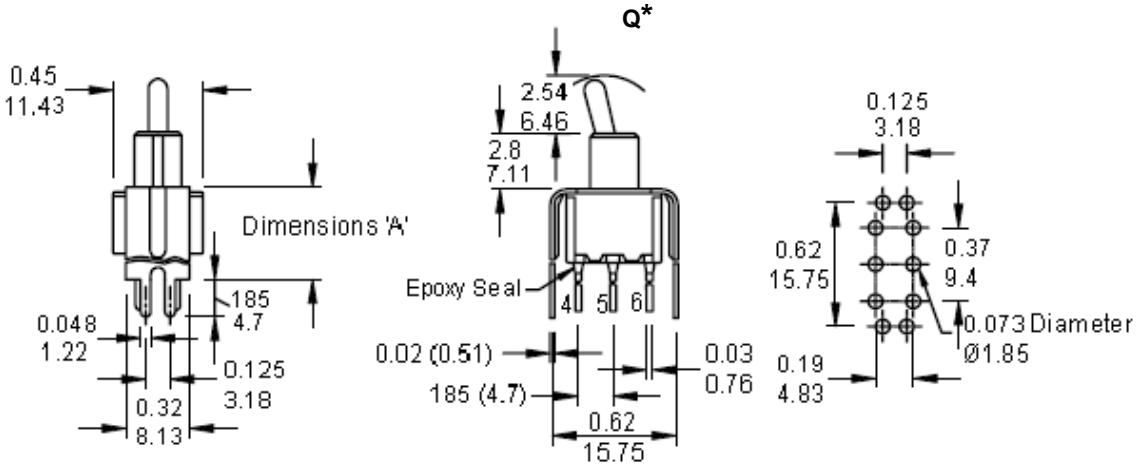

Dimensions : Inches (Millimetres)

Dimension Table

	'A'
S30	0.63 (16)

Standard Nut

R*

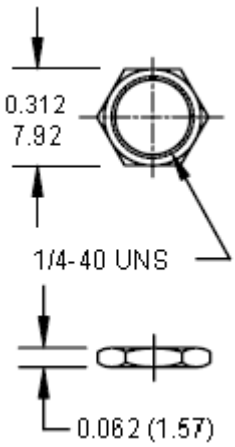

S*

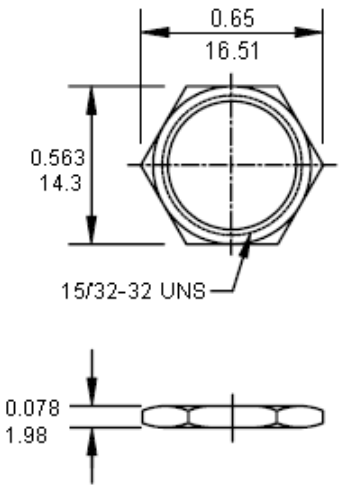

Dimensions : Inches (Millimetres)

Lock Washer

T*

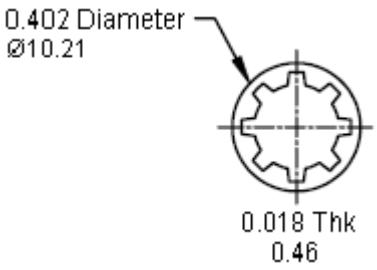

U*

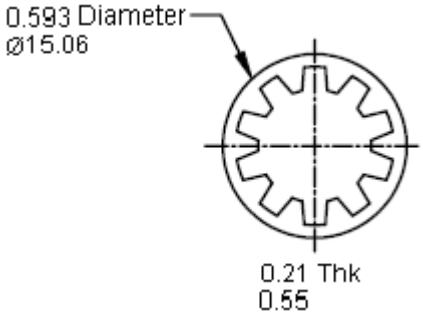

Locking Ring

V*

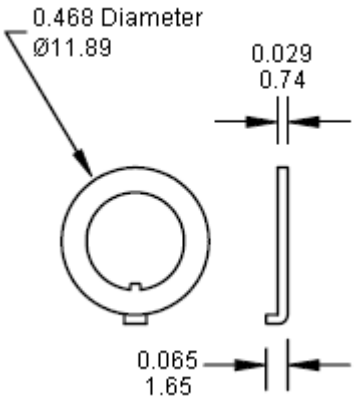

W*

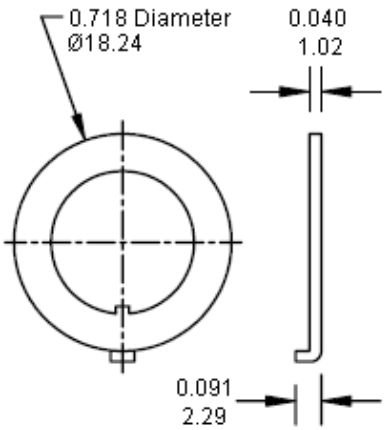

Panel Mounting

X*

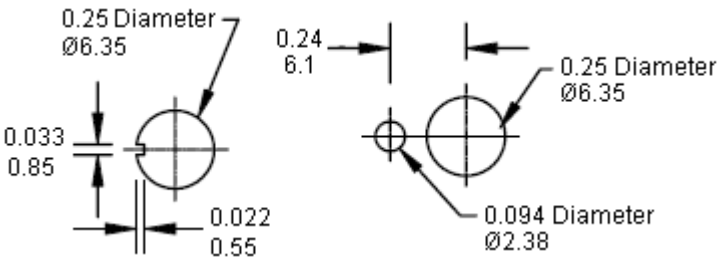

Y*

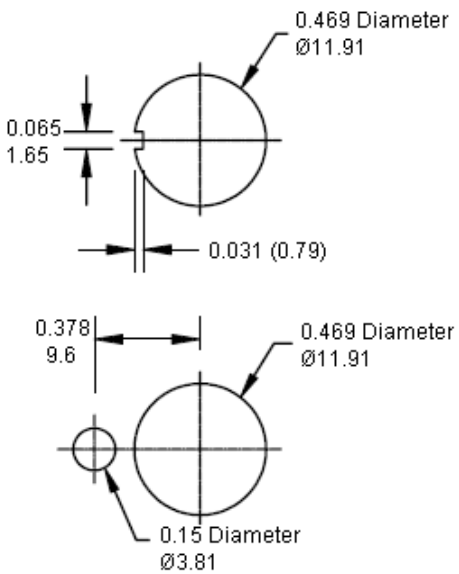

Dimensions : Inches (Millimetres)

Part Number Table

Description	Part Number	
Toggle Switch	SPC21412	A*, F*, H*, N*, O*, R*, V*, X*
Toggle Switch	SPC21284	A*, F*, H*, L*, O*, R*, T*, V*, X*
Toggle Switch	SPC21285	B*, F*, H*, L*, O*, R*, T*, V*, X*
Toggle Switch	SPC21286	F*, C*, H*, L*, O*, R*, T*, V*, X*
Toggle Switch	SPC21287	D*, F*, H*, L*, O*, R*, T*, V*, X*
Toggle Switch	SPC21288	E*, F*, H*, L*, O*, R*, T*, V*, X*
Toggle Switch	SPC21289	A*, F*, H*, L*, P*, R*, T*, V*, X*
Toggle Switch	SPC21290	A*, G*, H*, L*, P*, R*, T*, V*, X*
Toggle Switch	SPC21291	B*, F*, H*, L*, P*, R*, T*, V*, X*
Toggle Switch	SPC21292	B*, G*, H*, L*, P*, R*, T*, V*, X*
Toggle Switch	SPC21293	C*, F*, H*, L*, P*, R*, T*, V*, X*
Toggle Switch	SPC21294	C*, G*, H*, L*, P*, R*, T*, V*, X*
Toggle Switch	SPC21295	D*, F*, H*, L*, P*, R*, T*, V*, X*
Toggle Switch	SPC21296	D*, G*, H*, L*, P*, R*, T*, V*, X*
Toggle Switch	SPC21297	E*, F*, H*, L*, P*, R*, T*, V*, X*
Toggle Switch	SPC21298	E*, G*, H*, L*, P*, R*, T*, V*, X*
Toggle Switch	SPC21299	A*, F*, J*, L*, O*, R*, T*, V*, X*
Toggle Switch	SPC21300	B*, F*, J*, L*, O*, R*, T*, V*, X*
Toggle Switch	SPC21301	C*, F*, J*, L*, O*, R*, T*, V*, X*
Toggle Switch	SPC21302	D*, F*, J*, L*, O*, R*, T*, V*, X*
Toggle Switch	SPC21303	E*, F*, J*, L*, O*, R*, T*, V*, X*
Toggle Switch	SPC21304	A*, F*, K*, O*, S*, U*, W*, Y*
Toggle Switch	SPC21305	B*, F*, K*, O*, S*, U*, W*, Y*
Toggle Switch	SPC21306	C*, F*, K*, O*, S*, U*, W*, Y*
Toggle Switch	SPC21307	D*, F*, K*, O*, S*, U*, W*, Y*
Toggle Switch	SPC21308	E*, F*, K*, O*, S*, U*, W*, Y*
Toggle Switch	SPC21309	A*, G*, I*, M*, P*, Q*, X*
Toggle Switch	SPC21310	B*, G*, I*, M*, P*, Q*, X*
Toggle Switch	SPC21311	C*, G*, I*, M*, P*, Q*, X*
Toggle Switch	SPC21312	D*, G*, I*, M*, P*, Q*, X*
Toggle Switch	SPC21313	E*, G*, I*, M*, P*, Q*, X*

Disclaimer This data sheet and its contents (the "Information") belong to the Premier Farnell Group (the "Group") or are licensed to it. No licence is granted for the use of it other than for information purposes in connection with the products to which it relates. No licence of any intellectual property rights is granted. The Information is subject to change without notice and replaces all data sheets previously supplied. The Information supplied is believed to be accurate but the Group assumes no responsibility for its accuracy or completeness, any error in or omission from it or for any use made of it. Users of this data sheet should check for themselves the Information and the suitability of the products for their purpose and not make any assumptions based on information included or omitted. Liability for loss or damage resulting from any reliance on the Information or use of it (including liability resulting from negligence or where the Group was aware of the possibility of such loss or damage arising) is excluded. This will not operate to limit or restrict the Group's liability for death or personal injury resulting from its negligence. SPC Multicomp is the registered trademark of the Group. © Premier Farnell plc 2011.

Unikeyic Electronics

Global Electronic Components Distributor

Click to view pricing, inventory, delivery, and lifecycle information:

multicomp:

MP005415 MC0603B393K500CT MC34747 MCMR08X2000FTL MCWR08X39R0FTL CF06332T/4/10 CFS-TF-1818 CMS-DF-1825 MC0603N100F500CT MCLPR50V478M30X25 MCMR06X1004FTL MP006937 MP006964 2213R-24G MC34589 MCAL0410A1-471KU MCSDC0603-560KU MCSDRH73B-681MHF SMAJ160A-13-F MC0402WGF499JTCE MC36427 MCMR50V335M4X7 MCWF12R7150BTL MC-SVT1-S06-G MC0603N100J201CT MCMF0W4FF8202A50 MUR1540 MCSR08X3300FTL MCMET 800MA 250V SPC19989