MCM AUDIO SELECT™

www.mcmelectronics.com

Model Number:	53-1221
*1.75“Titainium Dome Compression Tweeter Driver	
*High Compliance Response:1.5K-20KHZ	
*30oz Magnet Structure	
*1.75"High Temperature Coil	
*SPL:100dB@1W/1M	
*400 Watts Rated Power	

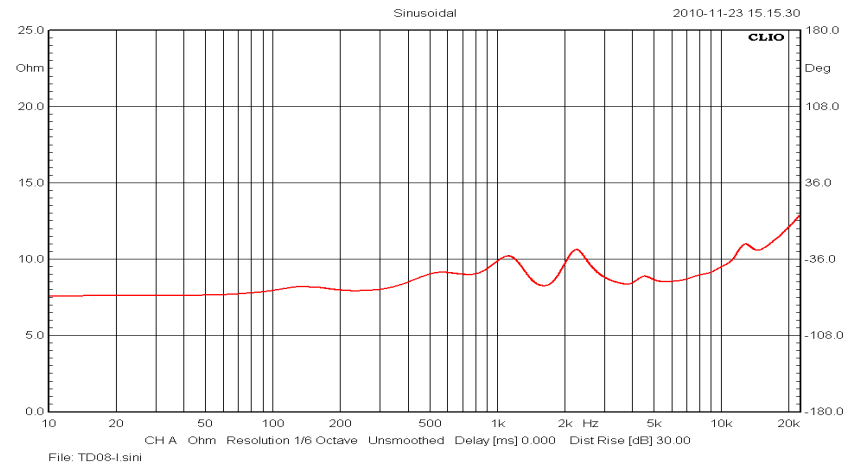

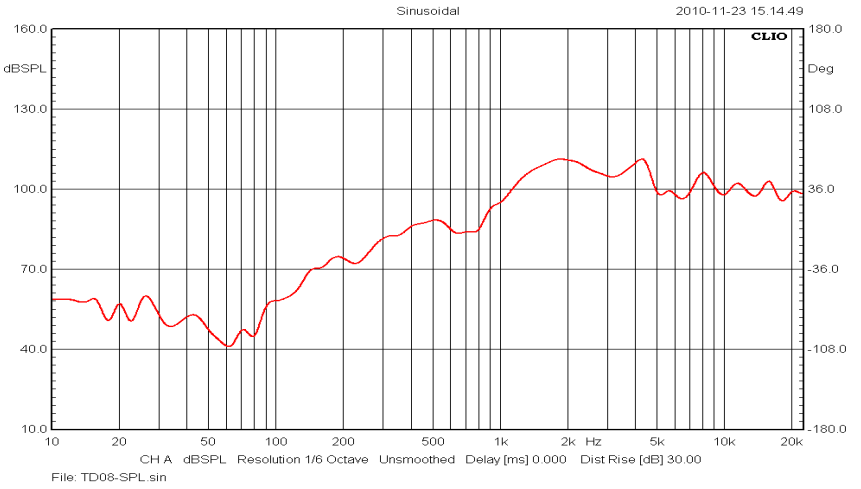

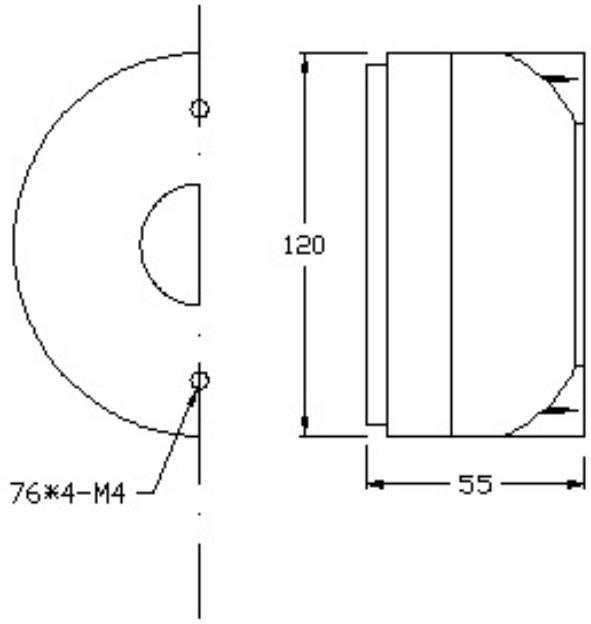

ALL DIMENSIONS ARE IN MILLIMETERS

Unikeyic Electronics

Global Electronic Components Distributor

Click to view pricing, inventory, delivery, and lifecycle information:

multicomp:

CF06332T/4/10 CFS-TF-1818 MC0603B393K500CT MC34747 MC0402WGF499JTCE MC0603N100F500CT MC34589 MP006937 MCMR08X2000FTL MCMR50V335M4X7 2213R-24G MCMET 800MA 250V MP005415 MP006964 MC36427 MCMR06X1004FTL CMS-DF-1825 MC-SVT1-S06-G MCAL0410A1-471KU MCWF12R7150BTL MCWR08X39R0FTL MCMF0W4FF8202A50 MCSDC0603-560KU SMAJ160A-13-F MC0603N100J201CT MCLPR50V478M30X25 MCSDRH73B-681MHF MCSR08X3300FTL MUR1540 SPC19989