Thermal Switch



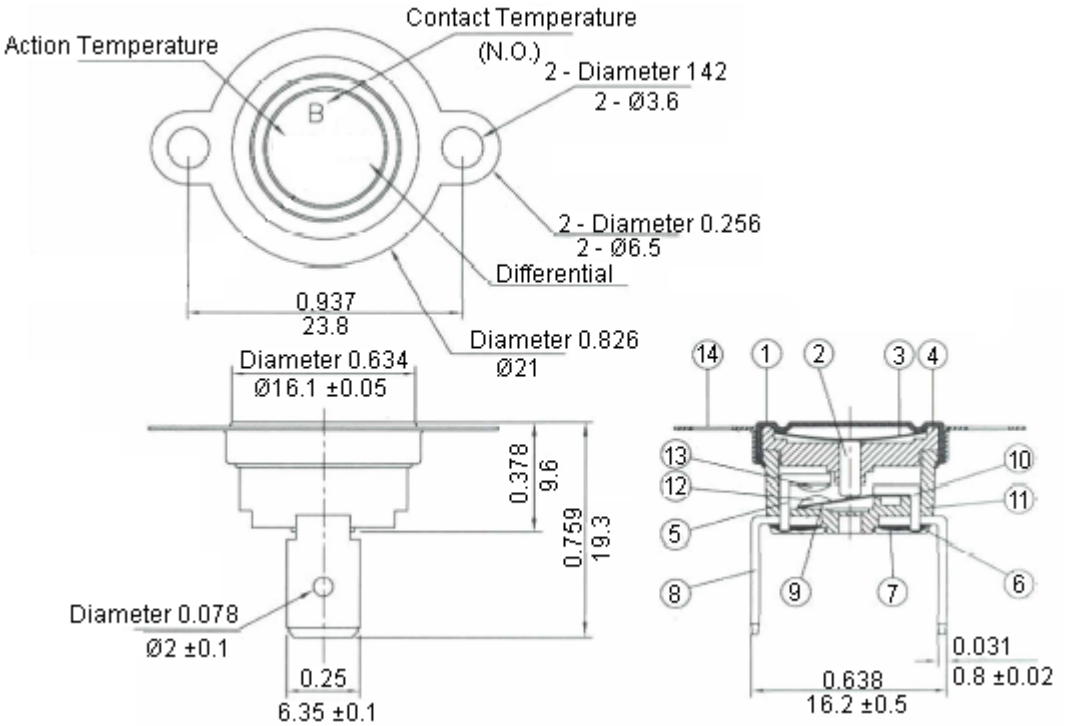

Dimensions : Inches (Millimetres)

Specification Table

Item	Parts Name	Material
1	Sensing Cap	Aluminium
2	Actuating Pin	Ceramic
3	Bimetal disc	Bimetal
4	Retainer	PPS
5	Stationary Arm	Brass Tin Plated
6	Solder	Tin
7	Glue	Epoxy
8	Terminal	Brass Tin Plated
9	Movable Arm	Beryllium Copper
10	Terminal-J	Brass Tin Plated
11	Case	PPS
12	Contact-R	Silver Alloy
13	Contact-F	Silver Alloy
14	Bracket	Steel Nickel Plated

Thermal Switch

Specifications:

Contact Type	: Normally open
Action Temperature	: 50°C ±3 K
Reset Temperature	: 35°C ±4 K
Terminal Size	: Amperes #250 TAB
Maximum Circuit Resistance	: 50 mΩ
Insulation Resistance	: l00 MΩ minimum at DC 500 V
Dielectric Strength	: AC 1,000 V for one minute or AC 1,800 V for one seconds
Approvals	: VDE UL CUL
Electrical Rating and Operating Life	: VDE - 15 A 240 V ac 100,000 cycles (resistive load) 16 A 250 V ac 10,000 cycles (resistive load) Licence no. 127475 (By standard differential : 10 k - 15 k) UL CUL - 15A 120 V ac 100,000 cycles (resistive load) Licence no. E192925 (By standard differential : 10 k - 15 k)

Part Number Table

Description	Part Number
Thermal Switch, NO, 50°C	T23B050ASR2-15

Important Notice : This data sheet and its contents (the "Information") belong to the members of the Premier Farnell group of companies (the "Group") or are licensed to it. No licence is granted for the use of it other than for information purposes in connection with the products to which it relates. No licence of any intellectual property rights is granted. The Information is subject to change without notice and replaces all data sheets previously supplied. The Information supplied is believed to be accurate but the Group assumes no responsibility for its accuracy or completeness, any error in or omission from it or for any use made of it. Users of this data sheet should check for themselves the Information and the suitability of the products for their purpose and not make any assumptions based on information included or omitted. Liability for loss or damage resulting from any reliance on the Information or use of it (including liability resulting from negligence or where the Group was aware of the possibility of such loss or damage arising) is excluded. This will not operate to limit or restrict the Group's liability for death or personal injury resulting from its negligence. Multicomp is the registered trademark of the Group. © Premier Farnell plc 2012.

Unikeyic Electronics

Global Electronic Components Distributor

Click to view pricing, inventory, delivery, and lifecycle information:

multicomp:

MCSDRH73B-681MHF MP006964 MC-SVT1-S06-G MC0603B393K500CT MC36427 MCMR06X1004FTL MCMR08X2000FTL MCSDC0603-560KU MCSR08X3300FTL MUR1540 MC0603N100J201CT MCLPR50V478M30X25 MCMET 800MA 250V MCMF0W4FF8202A50 SMAJ160A-13-F MCWR08X39R0FTL MP005415 2213R-24G MC34747 SPC19989 MP006937 CFS-TF-1818 CMS-DF-1825 MC0402WGF499JTCE MC0603N100F500CT MCWF12R7150BTL CF06332T/4/10 MC34589 MCAL0410A1-471KU MCMR50V335M4X7