ROHS

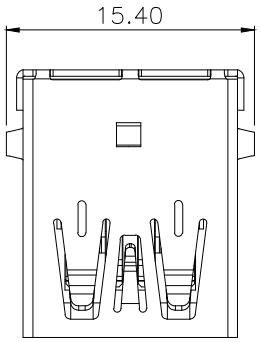

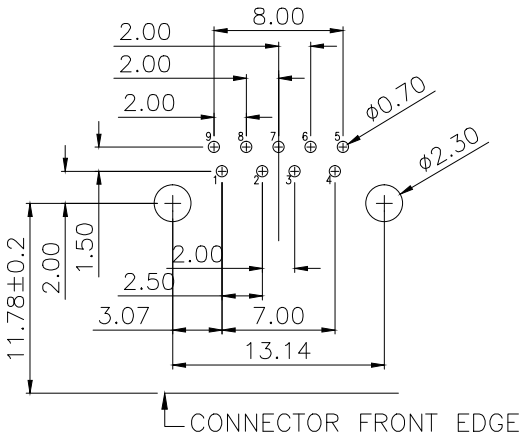

P.C.B LAYOUT
TOL:±0.05

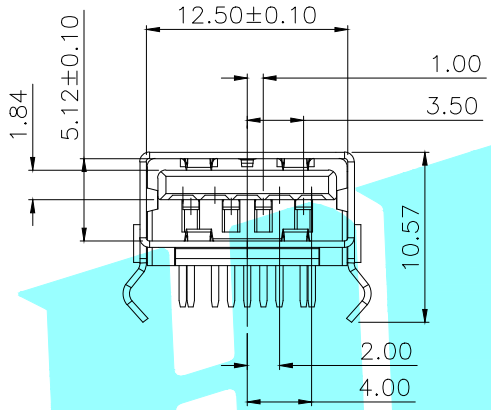

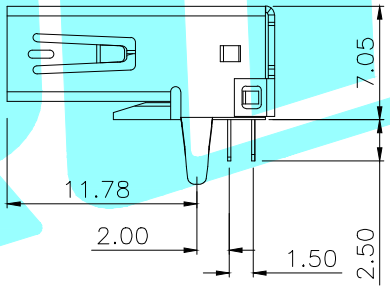

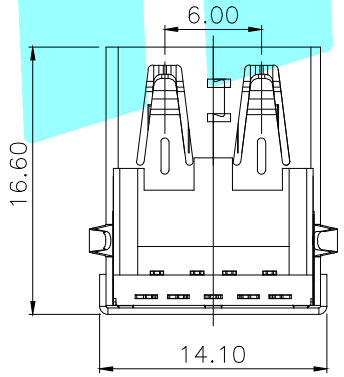

NOTES:
1.MECHANICAL:
MATING: 35N MAX.
WITHDRAWAL: 10N MIN.
DURABILITY: 1500 CYCLES
2.ELECTRICAL:
CURRENT: 1.8A Maximum for pin1 and pin4, and 0.25A for all the other pin.
VOLTAGE: 30 Vac (rms)
WITHSTANDING VOLTAGE: 100V AC
CONTACT RESISTANCE:
30 mΩ (Max) initial for pin1 and pin4.
50 mΩ (Max) initial for all other contacts.
Maximum change of +10mΩ after environmental stresses.
Measure at 20 mV (Max) open circuit at 100 mA.
DIELECTRIC WITHSTANDING VOLTAGE: 100V AC(RMS)
INSULATION RESISTANCE: 100MΩ MIN.
3.ENVIRONMENTAL
TEMPERATURE RANGE −55°C ~ +85°C

ECN NO.	REV.	DATE.	DESCRIPTION.	CHANGE.	CHECK.	APPRO.
———	A	———	NEW	———	———	———

APPROVALS		DATE	HRO韩宏® ELECTRONICS CO.,LTD	
DRAWN	LIUCAN	2020.11.30		
CHECKED			TITLE:	USB CONNECTOR
APPROVALS			PART NO.	U−A−39DD−W−2
TOLERANCES ARE	30~以上 ±0.30; 10~30 ±0.25; 5~10 ±0.20; ~ 5 ±0.15	ANGLE ±2°	UNIT: mm	SCALE: 1:1 PROJ:
			DRAWING NO.	——— SHEET 1 OF 1

Unikeyic Electronics

Global Electronic Components Distributor

Click to view pricing, inventory, delivery, and lifecycle information:

HRO:

K2-1102BG-I4CW-01 SIM-08A U-M-M5DD-W-2 K8-5851D-L1 K2-1102SP-K4SC-04 DC-031A-10A K2-1101DF-A4DW-01 DQ-03BP U-C-M5SS-Y-1 U-F-M5DD-W-L K2-1102AT-A4CW-01 PJ-3250-5A TYPE-C-31-M-04 U-C-M5DW-W-1 U-F-M5DS-Y-1 U-F-M5SS-W-5 K2-1102DP-G4SW-04 K3-1346S-F1 SS-22D03-G4 K2-1818DP-A3SW-01 DA-10RP DS-01BP ES-07KP K2-1102SP-A5SC-04 K3-2258S-E1 K5-1617SA-01 K2-1102DP-S3SW-04 PJ-399B-6A U-F-M5DD-Y-L U-F-M5DD-Y-L1