JYEG

RoHS Compliant

Tangshan Guoxin Jingyuan Electronics Co.,Ltd

Add：Xinxing Electronics Industrial Park, Yutian,Tangshan,Hebei,China

TEL: 86-315-6118243 **E-mail: sales@jingyuan.com**

FAX: 86-315-6113576 **Web : www.jingyuan.com**

APPROVAL SHEET

Customer :

Part Number :

JYEG P/N : JYD1

Holder : SMD2016

Frequency : 16.000~96.000MHZ

Manufacturer : Guoxin Jingyuan Electronics

Date : 2025/12/20

Prepared	Checked	Approved
Huang Mingxing	Yang Tiesheng	Zhang Liqiang

(For Customer Use)

Acceptable	Non-Acceptable

Revision History

No.	Revised Date	Change Content	Approved	Remark
V1.0	25.12.20	Initial release	Yang Tiesheng	

1.This specification applies to SMD quartz crystal unit with a frequency of 16.000~96.000MHz.

2. Electrical characteristics

ITEM/TYPE	SMD2016
Frequency Range	16.000~96.000MHz
Mode of Vibration	Fundamental
Frequency Tolerance (at 25°C)	±10ppm,or specify
Frequency Stability Over Operating Temperature Range	±30ppm/-40~85°C, ±50ppm, ±100ppm/-40~125°C, or specify
Shunt Capacitance	1.5pF Max.
Load Capacitance	6~50pF or Series
Resonance Resistance	As per below table1.
Drive Level	300μW Max.
Aging	±2ppm/year
Insulation Resistance	500MΩ@DC100V
Storage Temperature Range	-55~125°C

Frequency	Resonance Resistance
16.000~20.000MHz	200Ω Max.
20.000~24.000MHz	100Ω Max.
24.000~96.000MHz	50Ω Max.

3. Construction

3.1 Crystal enclosure seal:

■ Seam seal ☐ resistance weld ☐ cold weld

3.2 crystal enclosure medium

☐ nitrogen ■ vacuum ☐ dry air

4.Dimension:

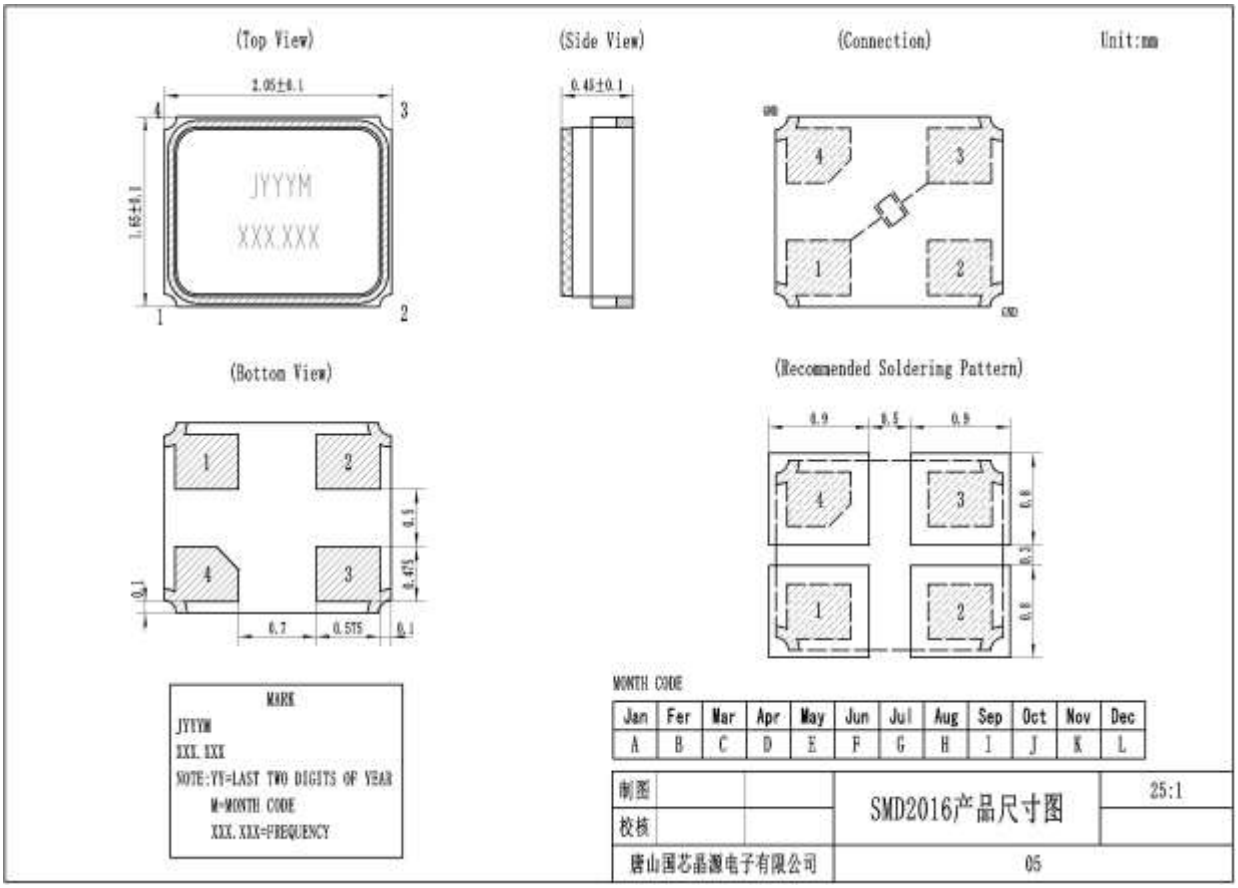

5. Marking

■ Laser Marking ☐ Ink Marking

6.Inside Structure

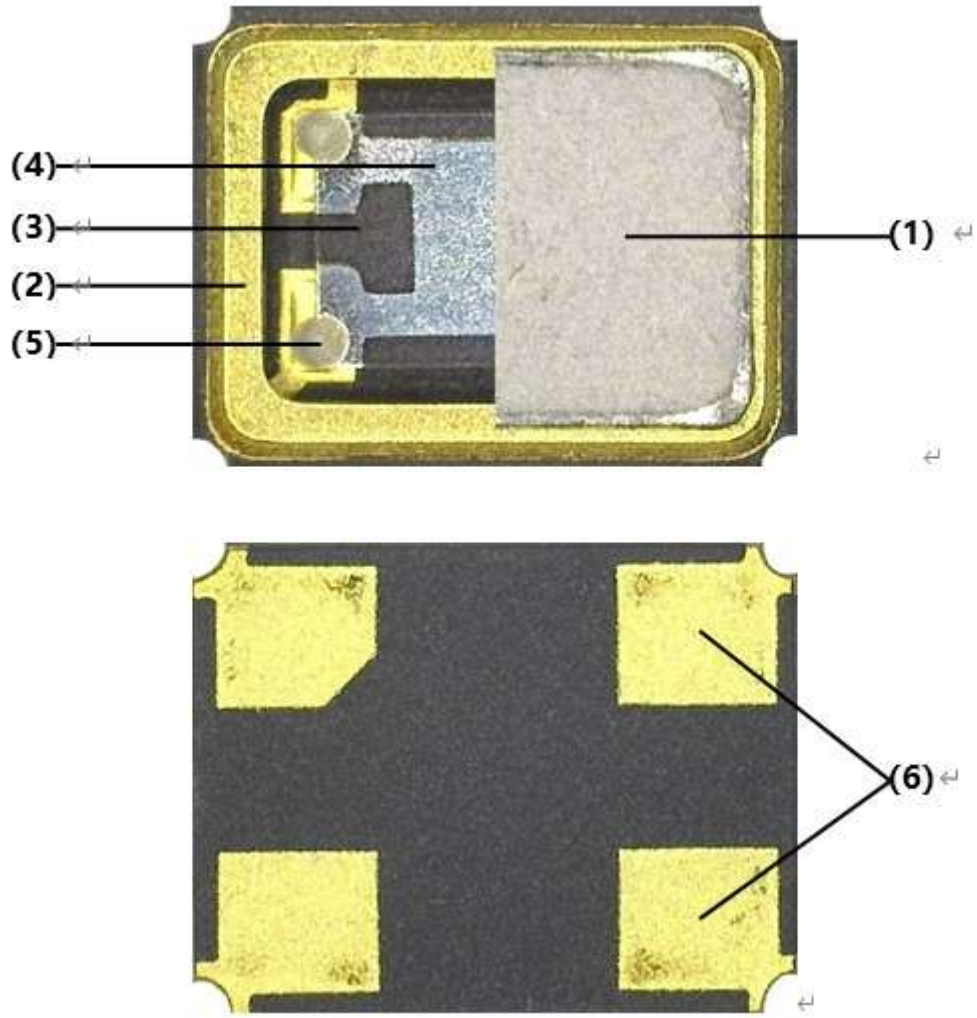

No.	Name	Material
(1)	Can	Fe-Co-Ni
(2)	Base	Ceramic
(3)	Blank	Quartz
(4)	Electrode	Ag
(5)	Epoxy	Silicon based
(6)	Soldering Pads	Au plated

7.Taping Dimension and Packing Instruction

7.1

UNIT:mm

1.Dimensions of Carrier Tape

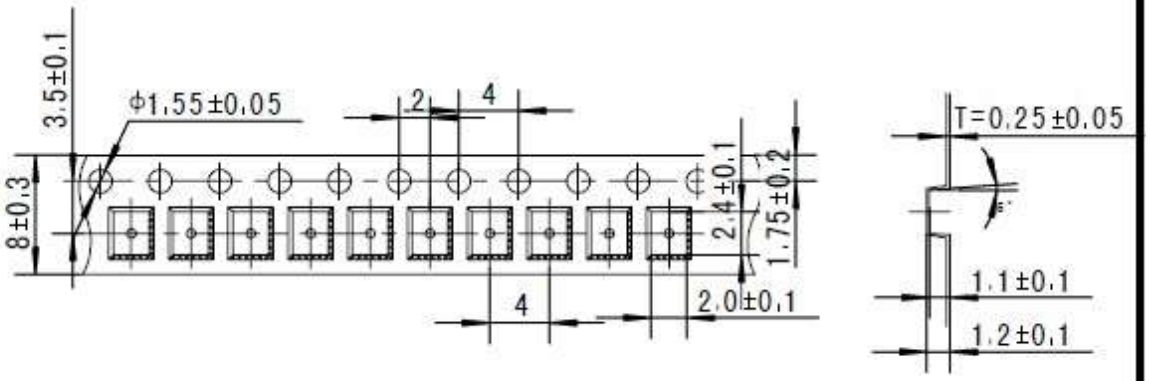

2.Dimensions of Reel

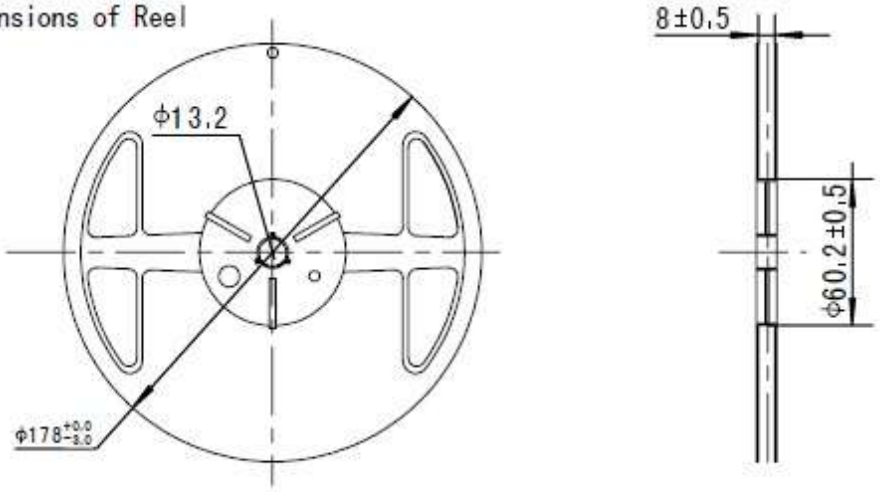

3.Packing

1 reel/box 1 reel=3000pcs

10 boxes/carton(the carton with bubble pad on four sides)

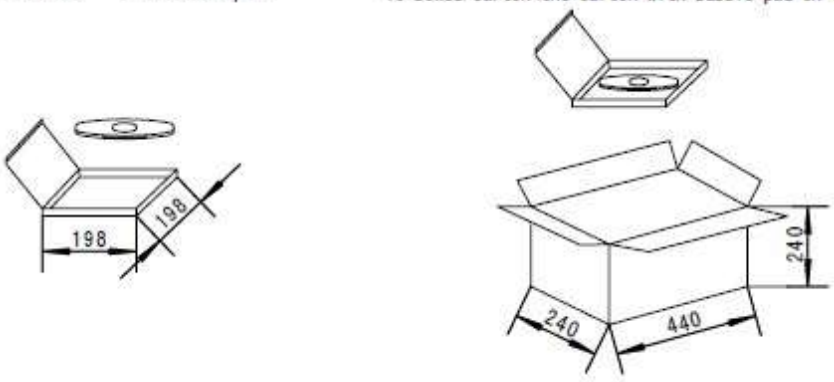

7.2

Release strength of cover tape

It has to between 30g to 90g under following condition.

Pulling direction : 165 deg. to 180 deg.

Speed : 300mm/min.

Otherwise unless specified.

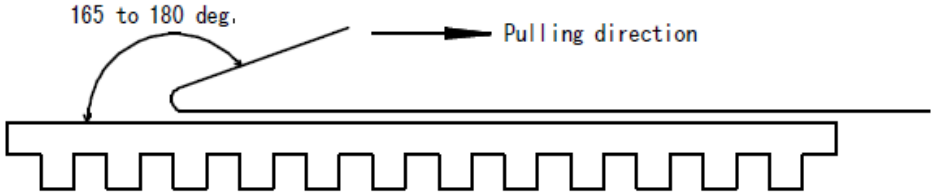

8.Reliability characteristic:

NO	Item	Condition	Specifications	Reference
8.1	HighTemperature Exposure (Storage) 高温存储	1000 hrs. at rated operating temperature r 1000 hrs at 85°C. npowered.Measurement at 24±2 hours after test conclusion. 元件就贮存在 85°C 下 1000 小时，在试验结束后 24±2 小时测试。	△F/F0≤+/-10ppm ESR≤5Ωor20%	MIL-STD-202 Method 108
8.2	Temperature Cycling 温度循环	-40° C to125°C part the1000 cycles will be at that perature rating.Measurement at 24±2 hours after test conclusion.30min maximum dwell time at each temperature extreme. 1 min. maximum transition time. 从-40℃~+125°C 1000 次循环。在试验结束后 24±2 小时测试。每个温度的停留时间不超过 30 分钟。转换时间不超过 1 分钟。	△F/F0≤+/-10ppm ESR≤5Ωor20%	JESD22 Method JA-104
8.3	Biased Humidity 稳态湿热	1000 hours 85°C/85%RH. Rated VDD applied with 1MΩ and inverter in parallel, 2X resonator CL capacitors between each resonator leg and GND.Measurement at 24±2 hours after test conclusion. 在温度 85°C，湿度 85%的条件下放置 1000 个小时在试验结束后 24±2 小时测试。	△F/F0≤+/-10ppm ESR≤5Ωor20%	MIL-STD-202 Method 103
8.4	Operational Life 高温寿命	125°C 1000 hrs. Measurement at 24±2 hours after test conclusion. 125°C 下 1000 个小时，用相同测试线路在时间结束后 24±2 小时测试。	△F/F0≤+/-10ppm ESR≤5Ωor20%	MIL-STD-202 Method 108

8.5	Mechanical Shock 机械冲击	MIL-STD-202Method 213Figure 1 of Method 213. Condition C 见 213 方法，试验条件：半正弦波 峰值 100g 持续时间 6ms 速度变化 3.75m/s，对样品 6 个方向 3 次，共 18 次施以冲击	△F/F0≤+/-10ppm ESR≤5Ωor20%	MIL-STD-202 Method 213
8.6	Vibration 振动	MIL-STD-202Method 204 5g 的力 20 分钟，用 8*5*0.031 英寸的 PCB 在 3 个方向各做 12 个循环。在 8 英寸边上有 7 个支撑点，在对面的角上两个支撑点。器件安装在任意一个支撑点的 2 英寸范围内。测试从 10HZ-2000HZ.	△F/F0≤+/-10ppm ESR≤5Ωor20%	MIL-STD-202 Method 204
8.7	Resistance to Soldering Heat 耐焊接热	Condition B No pre-heat of samples. Note: SingleWave solder - Procedure 1 with solder within 1.5 mm of device body for Leaded. Procedure 1 except 245°C and immerse only to level to cover terminals for SMD. 未预热的样品 Condition B. 备注：单波焊接 -Porcedure 1 引脚产品焊料少于 1.5mm,除了 245℃外其他 Procedure 1，SMD 产品浸到覆盖 SMD 引脚。	△F/F0≤+/-10ppm ESR≤5Ωor20%	MIL-STD-202 Method 210
8.8	Solderability 可焊性	引脚产品： Method A@245℃,category 3. SMD 产品：Method D category3 @260℃ √	Electrical Test not required. Magnification 50 X.>95%tin 不测电参数 >95%浸润.	J-STD-002
8.9	Board Flex 线路板弯曲	60 sec minimum holding time. 最少保留 60 秒。	10 倍放大镜下检查没有明显伤痕。	AEC Q200-005
8.10	Terminal Strength 引线、引脚强度 (SMD)	Terminal Strength Surface Mount / Shear Stress Test 施加 1.8kg 力 60 sec 测试带引脚器件的引脚整体试验。 条件： A(2.27Kg) C(227g)	有明显断裂、伤痕。	AEC Q200-006

9.All products are RoHs compliant

10. Reflow Profile

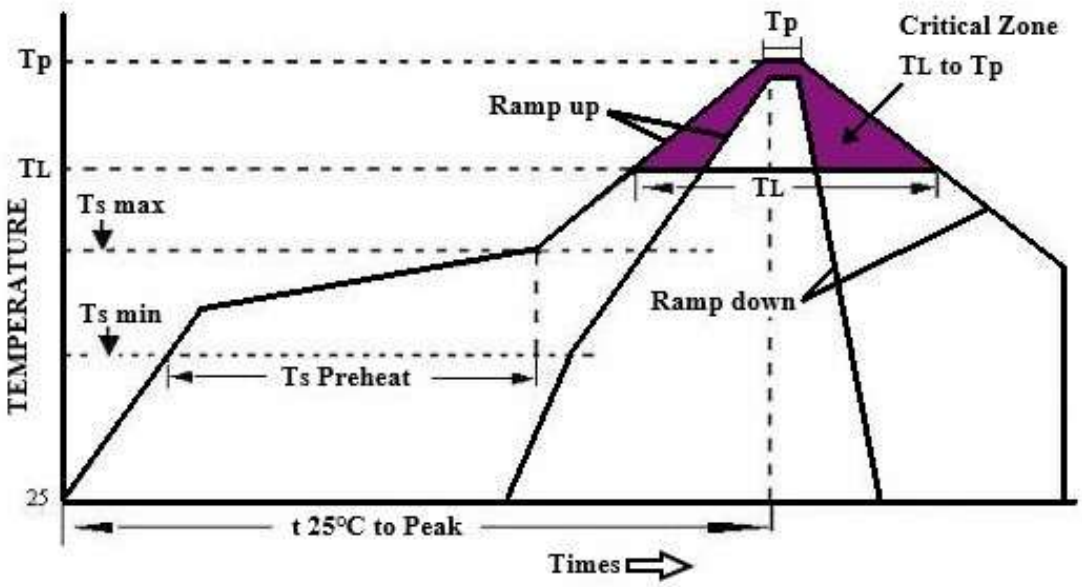

High Temperature Infrared /Convection

Note:Temperature shown are applied to body of device

Ts max to T_L(Ramp-up Rate)	3℃/second max
Preheat Temperature Min(Ts Min) Temperature Typical(Ts Typ) Temperature Max.(Ts Max) Time(ts)	 150℃ 175℃ 200℃ 60-180 seconds
Ram-up Rate(T_L to Tp)	3℃/second Max
Time Maintained Above: --Temperature(T_L) --Time(T_L)	 217℃ 60-150seconds
Peak Temperature (Tp)	260℃ Max for 10 seconds
Time within 5℃ of actual peak(t_p)	20-40 seconds
Ramp-down Rate	6℃/seconds Max
Tune 25℃ to Peak Temperature(t)	8 minutes Max
Moisture Sensitivity Level	Level 1

High Temperature Manual Soldering

Note:Temperature shown are applied to body of device

260℃ Max for 10 seconds Max, 4 times Max

Unikeyic Electronics

Global Electronic Components Distributor

Click to view pricing, inventory, delivery, and lifecycle information:

JYEG:

JYD2A1Z3F4-10-25.000000 JYD5A1G7G8-20-25.000000 JYGD5A1E3D6-20-25.000000
JYOD7E7G3C5Y-12.288000 JYD3A1C7G6-9-32.000000 JYD5A1Z7GZ-20-25.000000
JYGD5A1G3D8-18-9.830400 JYOD7H7G3C5Y-10.000000 JYOD2H7H3C5Y-25.000000
JYD2A1G3D9-10-25.000000 JYD3A1C7G5-14-26.000000 JYD3A1Z3E4-10-32.000000
JYD3A1C2C4-10-32.000000 JYD5A1C7GZ-12-13.225625 JYD5A1G7G6-20-25.000000
JYD5A1Z2C4-10-27.000000 JYGD5A1E1B6-18-25.000000 JYGD5A1E7G6-18-9.830400
JYD5A1C7GZ-20-9.830400 JYOD5H7G3C5Y-25.000000 JYD5A1C5G5-10-25.000000
JYD7A1C7G8-20-10.000000 JYD5A1G3D9-13-25.000000 JYD2A1G7G9-18-25.000000
JYD5A1C2C4-10-12.288000 JYD5A1E7G8-18-25.000000 JYD5A1G7G8-20-10.000000
JYD5A1G7GZ-18-25.000000 JYGD3A1E7G8-18-12.288000 JYGD3A1G2C8-10-26.000000