Kinghelm®

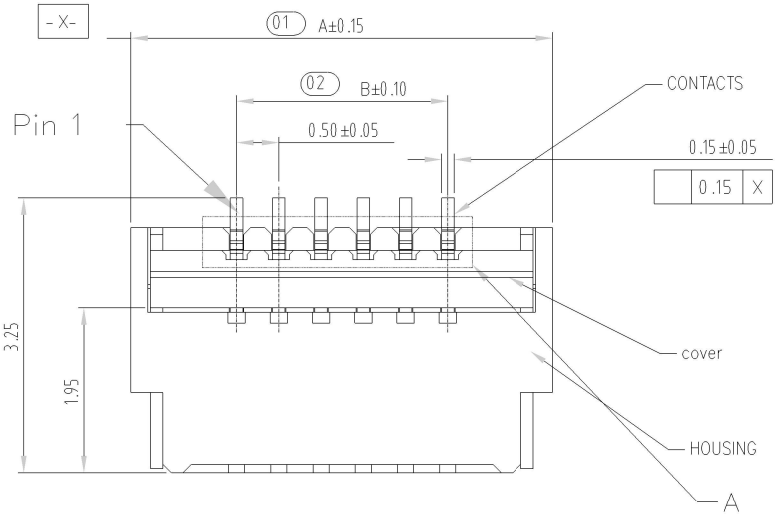

NOTE:

1. MATERIAL:
   HOUSING: LCP (UL94V-0), COLOR: NATURAL.
   CONTACTS: COPPER ALLOY.
   PEG: COPPER ALLOY.
   ACTUATOR: LCP (UL94-V0). COLOR:BLACK
2. RATING:
   OPERATING VOLTAGE: 50Vrms AC.
   CURRENT RATING: 0.5A.
   OPERATING TEMPERATURE: -55° C~+85° C.
   OPERATING HUMIDITY RANGE: RELATIVE HUMIDITY 90% MAX.(NO CONDENSATION)
   STORAGE TEMPERATURE RANGE: -10° C~+50° C.
   STORAGE HUMIDITY RANGE: RELATIVE HUMIDITY 90% MAX.(NO CONDENSATION)

3.Pater Number:

带 (xx) 为重点管控尺寸

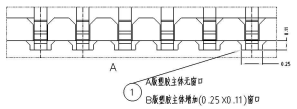

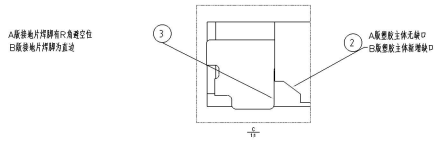

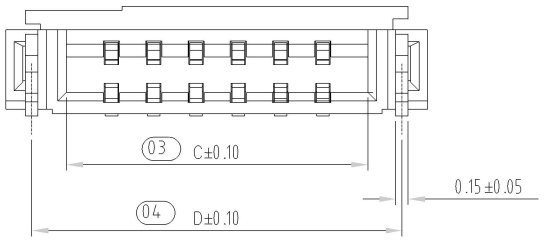

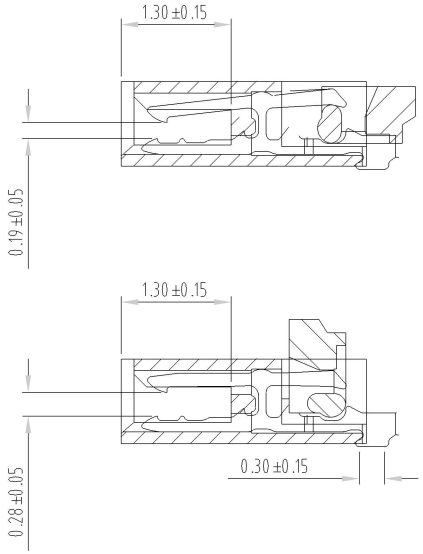

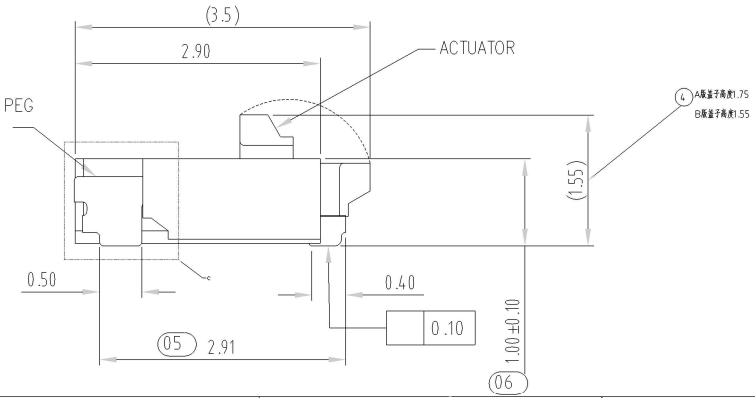

REV	DESCRIPTION	ECN.NO	BY	DATE
B	① 塑胶主体增加(0.25X0.11)窗口 ② 塑胶主体新增缺口 ③ 接地片焊脚R角改为直边 ④ 盖子高度1.75改为1.55	2021051001	liupeng	2021/5/10
A	NEW DRAWING		liupeng	

本产品需符合 □RoHS ☑SONY00259 □HF □ 其它 ✓
※禁止使用本公司所禁用有毒物质

- TOLERANCES- UNLESS OTHERWISE SPECIFIED 公差參考表			
X.X	:±0.30	X.X°	:±5°
X.XX	:±0.20	X.XX°	:±2°
X.XXX	:±0.10	X.XXX°	:±1°

深圳市金航标电子有限公司	www.kinghelm.com.cn
KH-FPC0.5-H1.0SMT-10P-QCHF	0755-28190160

APPD: 核准:
CHECK: 校對:
DRAW: LIUPENG 繪圖:

TITLE: 產品名稱: FPC 0.5Pitch 1.0H ZIF R/A Connector

DWG NO: 產品料號: FP242AH-0XXG10M

DATE	SCALE	UNIT	PAGE
20111209	1:1	mm	1/2

Kinghelm®

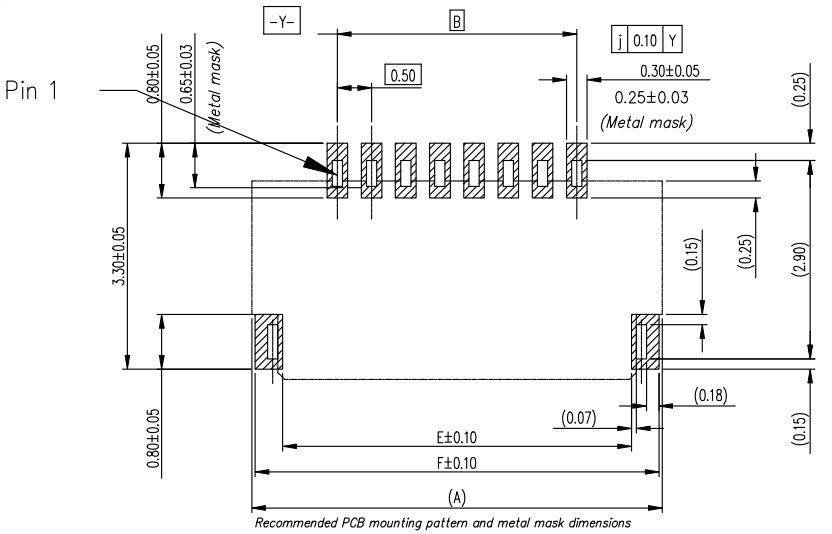

Recommended PCB mounting pattern and metal mask dimensions

Recommended metal mask thickness: t=0.1

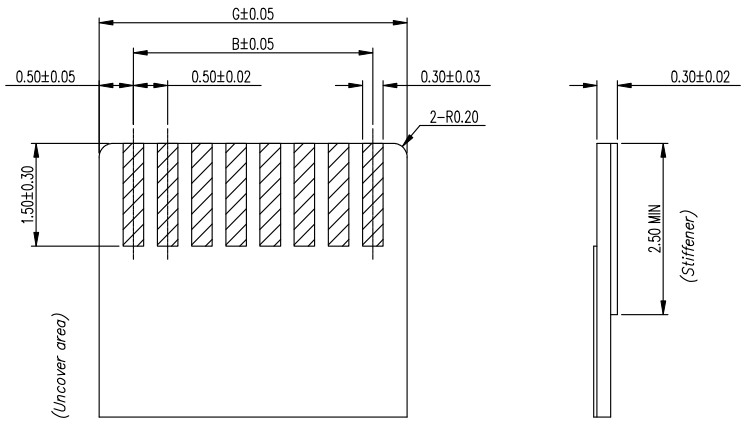

Recommended FPC/FFC Dimensions

50	27.00	24.50	25.57	26.39	26.10	26.90	25.50
45	24.50	22.00	23.07	23.89	23.60	24.40	23.00
40	22.00	19.50	20.57	21.39	21.10	21.90	20.50
34	19.00	16.50	17.57	18.39	18.10	18.90	17.50
32	18.00	15.50	16.57	17.39	17.10	17.90	16.50
30	17.00	14.50	15.57	16.39	16.10	16.90	15.50
28	16.00	13.50	14.57	15.39	15.10	15.90	14.50
26	15.00	12.50	13.57	14.39	14.10	14.90	13.50
24	14.00	11.50	12.57	13.39	13.10	13.90	12.50
22	13.00	10.50	11.57	12.39	12.10	12.90	11.50
20	12.00	9.50	10.57	11.39	11.10	11.90	10.50
18	11.00	8.50	9.57	10.39	10.10	10.90	9.50
16	10.00	7.50	8.57	9.39	9.10	9.90	8.50
14	9.00	6.50	7.57	8.39	8.10	8.90	7.50
12	8.00	5.50	6.57	7.39	7.10	7.90	6.50
11	7.50	5.00	6.07	6.89	6.60	7.40	6.00
10	7.00	4.50	5.57	6.39	6.10	6.90	5.50
8	6.00	3.50	4.57	5.39	5.10	5.90	4.50
7	5.50	3.00	4.07	4.89	4.60	5.40	4.00
6	5.00	2.50	3.57	4.39	4.10	4.90	3.50
5	4.5	2.00	3.07	3.89	3.60	4.50	3.00
4	4.00	1.50	2.57	3.39	3.10	3.90	2.50
Number of Contacts	DIM A	DIM B	DIM C	DIM D	DIM E	DIM F	DIM G

本产品需符合 □RoHS ☑SONY00259 □HF □ 其它 ✓
※禁止使用本公司所禁用有毒物质

REV	DESCRIPTION	ECN.NO	BY	DATE
B	盖子高度由1.75改为1.55MM	2021051001	liupeng	2021/5/10
A	NEW DRAWING		liupeng	

-TOLERANCES-
UNLESS OTHERWISE SPECIFIED
公差 考表

X.X	:±0.30	X.X°	:±5°
X.XX	:±0.20	X.XX°	:±2°
X.XXX	:±0.10	X.XXX°	:±1°

深圳市金航标电子有限公司 | www.kinghelm.com.cn
KH-FPC0.5-H1.0SMT-10P-QCHF | 0755-28190160

APPD: 核准:
CHECK: 校 :
DRAW: : LIU

TITLE: 品名 : FPC 0.5Pitch 1.0H ZIF R/A Connector
DWG NO: 品料 : FP242AH-0XXG10M

DATE	SCALE	UNIT	PAGE
20111209	1:1	mm	2/2

Kinghelm®

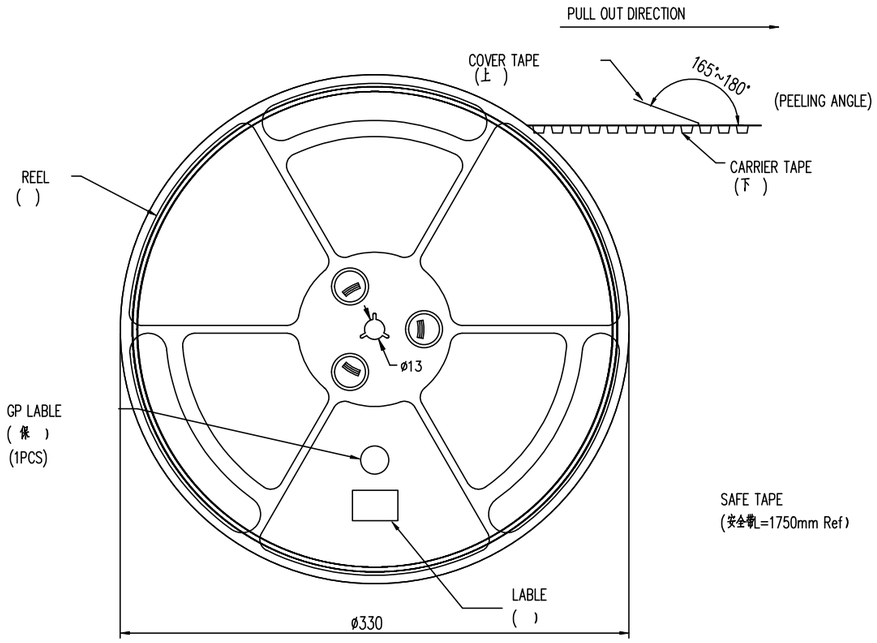

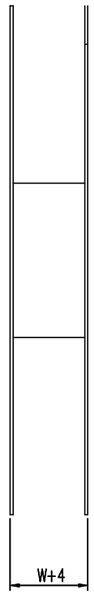

SCALE 1:4

NOTE:

1.10 Sprocket hole pitch cumulative tolerance ±0.20.
2.Carrier camber is within 1mm in 100mm.
3.Material: black conductive polystyrene alloy.
4.Material Thickness: 0.3±0.05mm.
5.All dimensions meet EIA-481-B requirements.
6.4000pcs Pef Reel.
7.For tape width(dim W)16 and 24mm
pilot holes are provided on one sides.
For tape width(dim W)32, 44 and 56mm
pilot holes are provided on both sides.

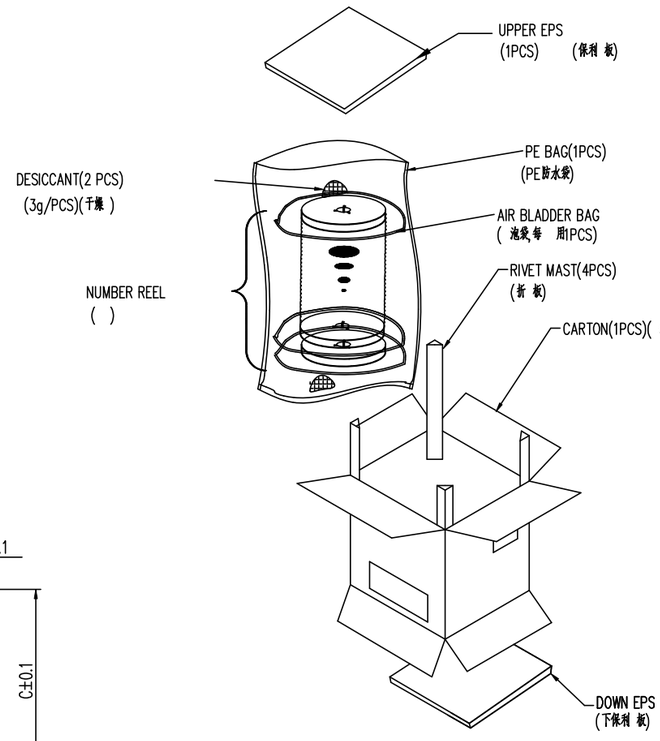

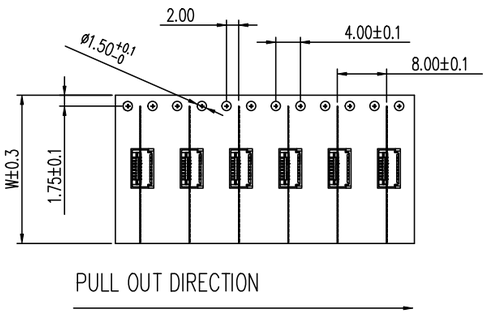

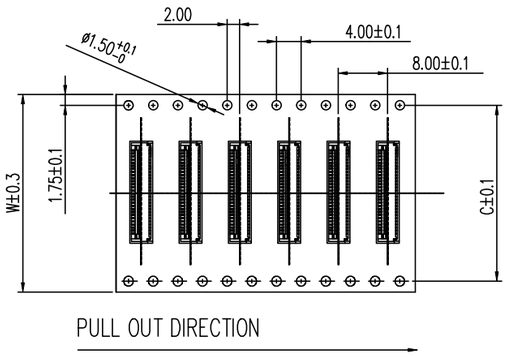

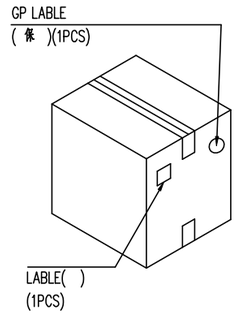

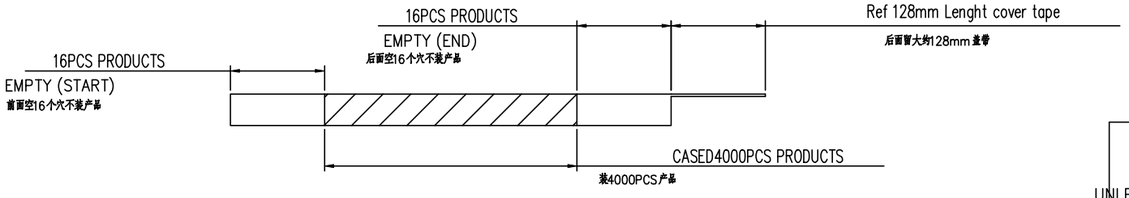

PIN NO.	W	C	PCS /REEL	REEL/CARTON	SUM(PCS)
04PIN~14PIN	16	–	4000	14	56000
16PIN~24PIN	24	–	4000	10	40000
28PIN~39PIN	32	28.4	4000	8	32000
40Pin~50PIN	44	40.4	4000	6	24000

本产品需符合 □RoHS ☑SONY00259 □HF □其他 ✓
※禁止使用本公司所禁用有毒物质

REV	DESCRIPTION	ECN.NO	BY	DATE
A	New Drawing		LIU	02/27'13

-TOLERANCES-
UNLESS OTHERWISE SPECIFIED
公差 考表

X.X :±0.30	X.X° :±5°
X.XX :±0.20	X.XX° :±2°
X.XXX :±0.10	X.XXX° :±1°

深圳市金航标电子有限公司 www.kinghelm.com.cn
KH-FPC0.5-H1.0SMT-10P-QCHF 0755-28190160

APPD: 核准:
CHECK: 校 :
DRAW: : LIU

TITLE: 品名 : 0.5mm Pitch FPC Connector
DWG NO: 品料 : FP242AH-0XXG10M

DATE	SCALE	UNIT	PAGE
	1:1	mm	1/1

Unikeyic Electronics

Global Electronic Components Distributor

Click to view pricing, inventory, delivery, and lifecycle information:

Kinghelm:

KH-4.5X4.5X10H-B3J KH-DR9S-F8.1-1 KH-PCIE5.2H-52P KH-2.54PH90-1X15P-L13.8
KH-2.54FH-1X15P-H8.5 KH-6X6X6H-SMT-FS KH-6X6X9H-STM KH-HDMI-0035-PK
KH-1.27PH90-1X16P-L10.5 KH-1.27PH90-1X20P-L10.5 KH-2.54PH180-1X8P-L11.5 KH-300922-TP
KH-6X6X10H-STM KH-FFC-V0.5-8P-150MM KH-SMA-K513-11G KH-081-TX100-IPEX4
KH-2PH180-1X14P-L8.7 KH-4.5X4.5X6.5H-SMT KH-2.54TXM-CB-H13.5 KH-4.5X4.5X6H-TJ
KH-BM2.54-2P-W KH-IPEX-K501-29 KH-MCX-K507-W KH-PH-2P-Z KHA(RG1.13)-TX50-IPEX
KH-FFC-V0.5-32P-150MM KH-1.27PH90-2X10P-L10.5 KH-2.54TXM-CB-H13.5-G KH-6X6X6H-TJ
KH-HDMI-0024-JBS