APPROVED: _____

DATE: _____ TITLE: _____

Rev	AWO #	Description	Date	Appr
-		RELEASED	11/24/22	
A		UPDATE TITTLE	4/14/23	WX
B		UPDATE TITTLE	2/27/24	LH/RC

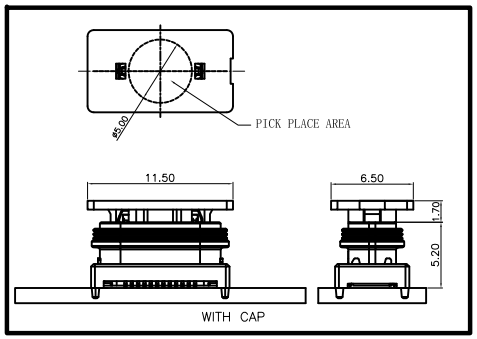

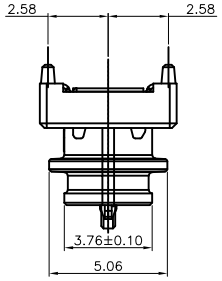

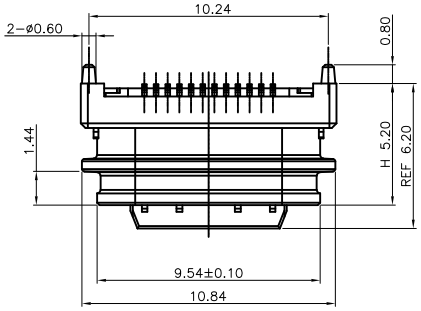

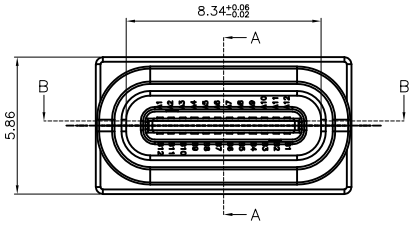

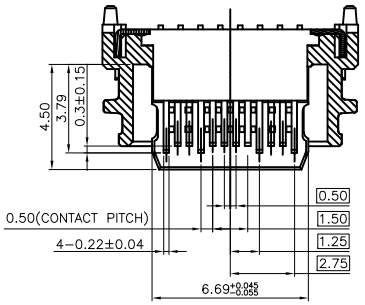

SECTION B−B

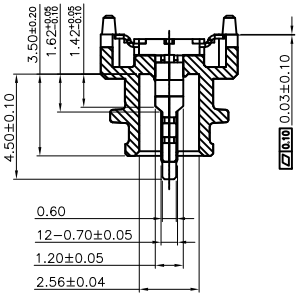

SECTION A−A

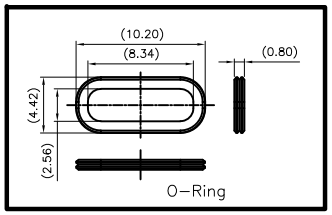

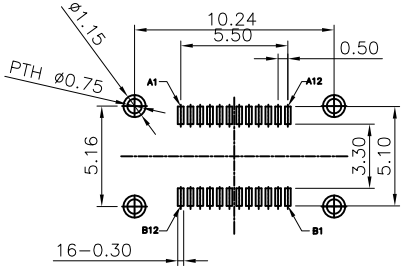

RECOMMENDED PCB LAYOUT

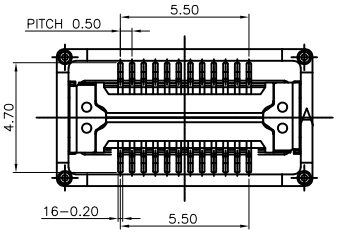

Pin	Signal Name	Mating Sequence	Pin	Signal Name	Mating Sequence
A1	GND	First	B12	GND	First
A2	SSTXp1	Second	B11	SSRXp1	Second
A3	SSTXn1	Second	B10	SSRXn1	Second
A4	V_{BUS}	First	B9	V_{BUS}	First
A5	CC1	Second	B8	SBU2	Second
A6	Dp1	Second	B7	Dn2	Second
A7	Dn1	Second	B6	Dp2	Second
A8	SBU1	Second	B5	CC2	Second
A9	V_{BUS}	First	B4	V_{BUS}	First
A10	SSRXn2	Second	B3	SSTXn2	Second
A11	SSRXp2	Second	B2	SSTXp2	Second
A12	GND	First	B1	GND	First
SHELL		GND	SHELL		GND

SPECIFICATIONS:
Material:
Insulator: Hi−Temp Thermoplastic, rated UL 94V−0
Insulator color: Black
Contacts: Copper Alloy
Shell: Stainless Steel, Nickel plated
O−Ring: Rubber
Plating:
Gold flash over Nickel underplate on contact area,
Tin over Nickel underplate on solder tails
Electrical:
Current rating: 5A min for Vbus, 1.25A min for other
Contact resistance: 40 mohms max
Insulation resistance: 100 Mohms min
Dielectric withstanding voltage: 100 VAC R.M.S.
Mechanical:
Insertion Force: 5~20N
Withdrawal Force: 8~20N
Durability: 10,000 cycles
Temperature Rating:
Operating temperature: −40°C to +85°C
Environmental:
Waterproof: IPX8
Lead free, RoHS compliant

RoHS COMPLIANT

PACKAGED ON TAPE & REEL

TRANSMISSION EFFICIENCY: 40G

UNLESS OTHERWISE SPECIFIED ALL DIMENSIONS ARE MILLIMETERS. TOLERANCES: EXCEPT AS NOTED

MM		ANGLE
X	± 0.50	± 2°
.X	± 0.30	
.XX	± 0.20	
.XXX	± 0.10	

DRAWN	WX	11/24/22
CHECKED	AC1	11/24/22
APPROVED		

THIS DRAWING CONTAINS INFORMATION THAT IS PROPRIETARY AND SHOULD NOT BE USED WITHOUT PRIOR WRITTEN PERMISSION FROM ADAM TECH

ADAM TECH
909 Rahway Avenue,
Union, NJ 07083
Phone: 908-687-5000
Fax: 908-687-5710

TITLE: UNIVERSAL SERIAL BUS TYPE C 4.0, GEN3X2 WATERPROOF IPX8, BLACK INSULATOR, 24PIN TRUE SURFACE MOUNT, VERTICAL

SIZE	PART NO.	REV.
X	USB-C40-S-VT-CS51A-TSMT-WP-BK-PP-T/R	B

REF:	SCALE:	SHEET
S00197C	NTS	1 OF 2

Rev	AWO #	Description	Date	Appr
SEE SHT 1 OF 2 FOR REVISION				

APPROVED: _____

DATE: _____ TITLE: _____

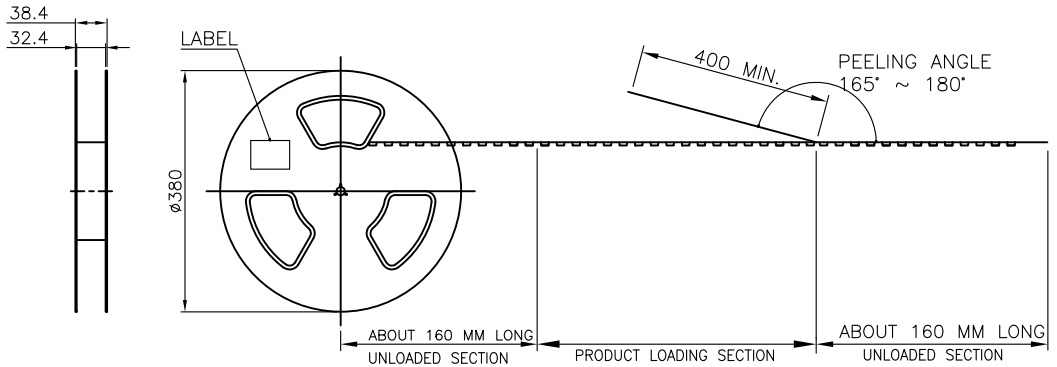

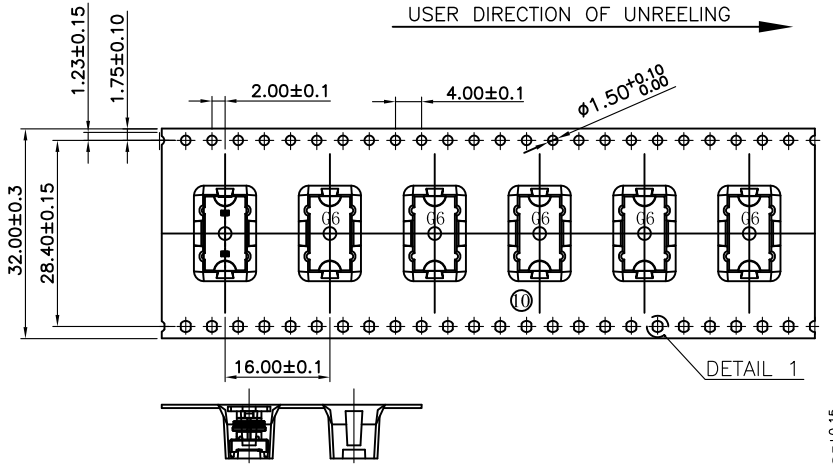

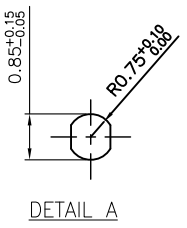

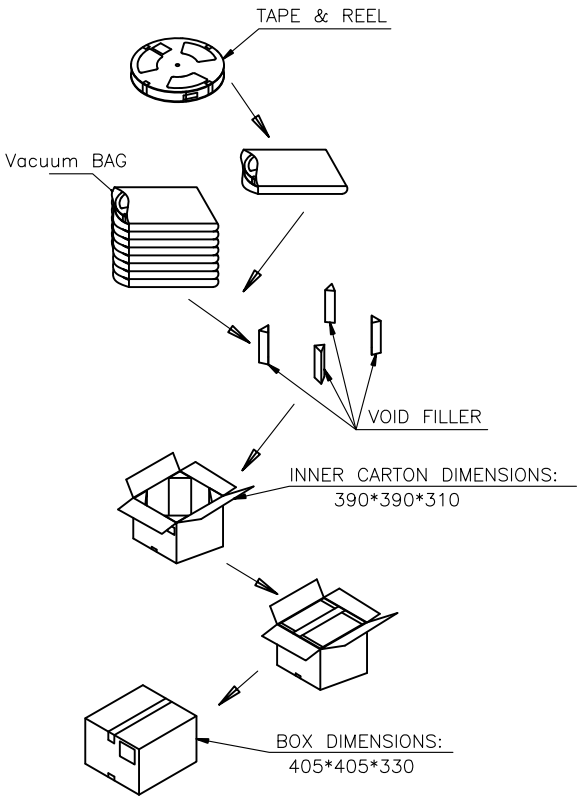

650	8	5200 PCS	-- KG	-- KG
PCS/ REEL	REELS/ CARTON	QUANTITY	GROSS WEIGHT	NET WEIGHT

NOTE:
1.MATERIAL:
BOX: FIBREBOARD, CORRUGATED, DOUBLE WALL
TAPE: POLYSTYRENES, HEAT-RESISTANT TEMPERTURE: 120°C, BLACK COLOR.
REEL: POLYSTYRENES, HEAT-RESISTANT TEMPERTURE: 70°C, BLUE COLOR.
BAG: POLYETHYLENE, HEAT-RESISTANT TEMPERTURE: 100°C.
2.PEELING STRENGTH: 0.1 ~ 1.3 N (10 ~ 130 GRAMS)
3.PEELING SPEED: 300 mm/min.
4.EACH BAG SHALL BE INCLUDED DESICCANT.

UNLESS OTHERWISE SPECIFIED ALL DIMENSIONS ARE MILLIMETERS. TOLERANCES: EXCEPT AS NOTED

MM	ANGLE
X ± 0.50	± 2°
.X ± 0.30	
.XX ± 0.20	
.XXX ± 0.10	

DRAWN	WX	11/24/22
CHECKED	AC1	11/24/22
APPROVED		

THIS DRAWING CONTAINS INFORMATION THAT IS PROPRIETARY AND SHOULD NOT BE USED WITHOUT PRIOR WRITTEN PERMISSION FROM ADAM TECH

ADAM TECH
909 Rahway Avenue,
Union, NJ 07083
Phone: 908-687-5000
Fax: 908-687-5710

TITLE: UNIVERSAL SERIAL BUS TYPE C 4.0, GEN3X2 WATERPROOF IPX8, BLACK INSULATOR, 24PIN TRUE SURFACE MOUNT, VERTICAL

SIZE	PART NO.	REV.
X	USB-C40-S-VT-CS51A-TSMT-WP-BK-PP-T/R	B

REF:	SCALE:	SHEET
S00197C	NTS	2 OF 2