TECH PUBLIC
台舟电子

TP78M15K3

1A Fixed Voltage Regulators

WWW.TECHPUBLIC.COM

Features

- 3-Terminal regulators
- Maximum Output current 1A
- Output voltage Vo: 15V
- Compact package: TO-252-2L

Applications

- HVAC Systems
- SMPS Post Regulation
- Test and Measurement Equipment
- Industrial Power Supplies

PIN CONFIGURATION

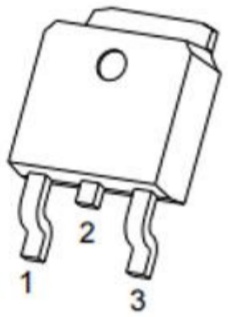

1.VIN

2.GND

3.OUT

Pin Number	Pin Name	Pin Function
1	VIN	Input of Supply Voltage
2	GND	Ground
3	VOUT	Output of the Regulator

Absolute Maximum Ratings

over operating free-air temperature range (unless otherwise noted)

Symbol	Parameter	Rating	UNIT
VIN	Input voltage	35	**V**
$R_{\theta JA}$	Thermal Resistance Junction-ambient to Air	80	℃/**W**
PD	Continuous total dissipation (Ta= 25 ℃)	1.25	**W**
T_{OPR}	Operating Junction Temperature Range	-40～+125	℃
T_{stg}	Storage temperature range	-65～+150	℃

TYPICAL APPLICATION

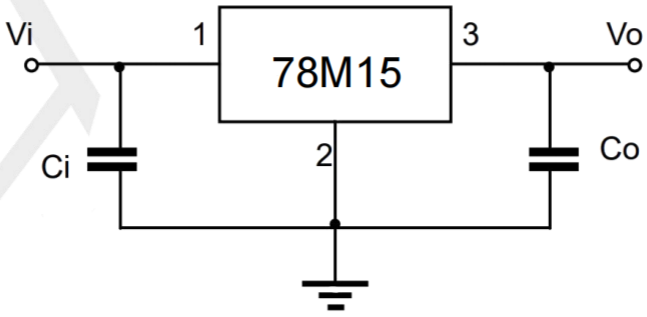

WWW.SOT23.COM.TW

Electrical Characteristics

(Vi=10V,Io=500mA,0<TJ<125℃,Ci=0.33μF, Co=0.1μF, unless otherwise specified)

AMETER	SYMBOL	TEST Conditions	MIN	TYP	MAX	UNIT
DC Output Voltage	VO	T_j=25℃	14.4	15	15.6	V
		P_D<15W V_I=17.5V to 30V, Io=5mA to 1A	14.25	15	15.75	V
Load Regulation	△Vo	T_j=25℃ Io=5mA to 1A	--	--	300	mV
		T_j=25℃ Io=250mA to 750mA	--	--	150	mV
Line regulation	△Vo	T_j=25℃ V_I=17.5V to 30V	--	--	300	mV
		T_j=25℃ V_I=20V to 26V	--	--	150	mV
Quiescent Current	Iq	T_j=25℃	--	--	8.0	mA
Quiescent Current Change	△Iq	V_I=17.5V to 30V	--	--	0.8	mA
		Io=5mA to 1A	--	--	0.5	mA
Output Voltage Drift	△Vo/△T	Io=5mA	--	0.8	--	mV/℃
Output Noise Voltage	V_N	T_j=25℃ 10Hz≤f≤100KHz	--	42	--	μV/Vo
Ripple Rejection	RR	V_I=17.5V to 30V , f=120Hz	--	60	--	dB
Dropout Voltage	Vd	Io=300mA T_j=25℃	--	1.0	--	V
Peak Current	Ipk	T_j=25℃	--	1.0	--	A

BLOCK DIAGRAM

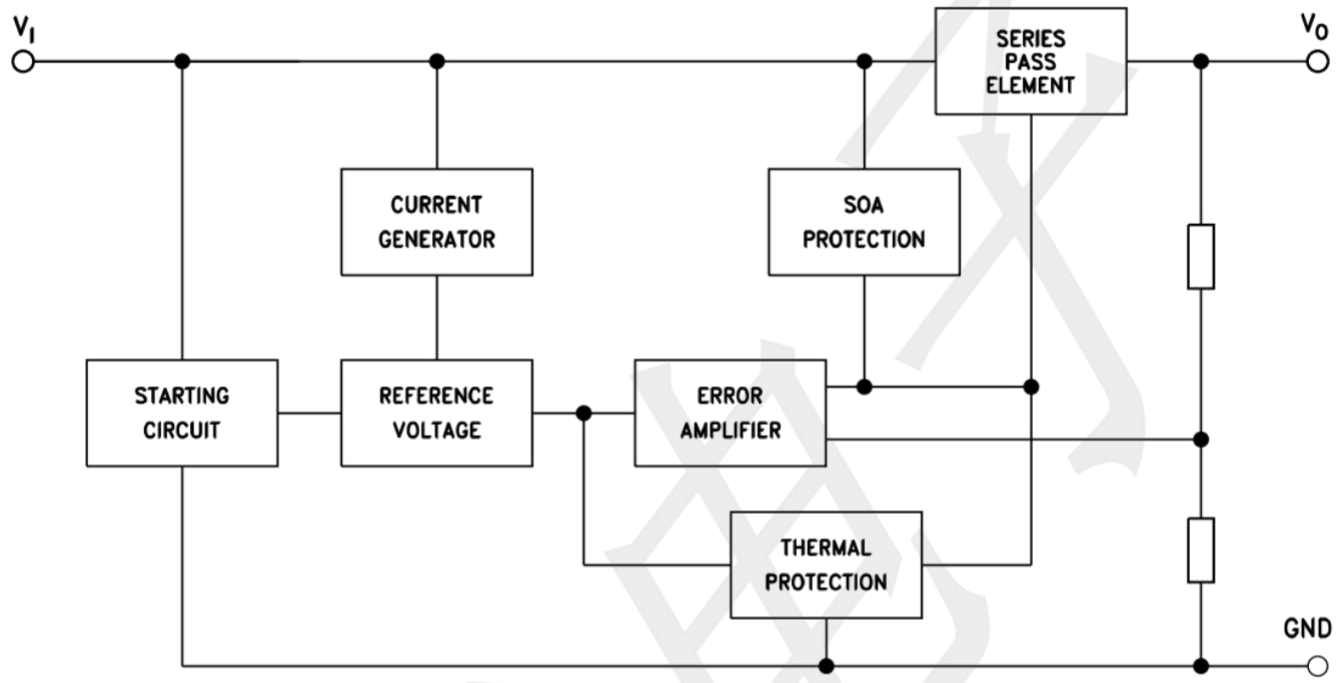

Typical Application Circuit

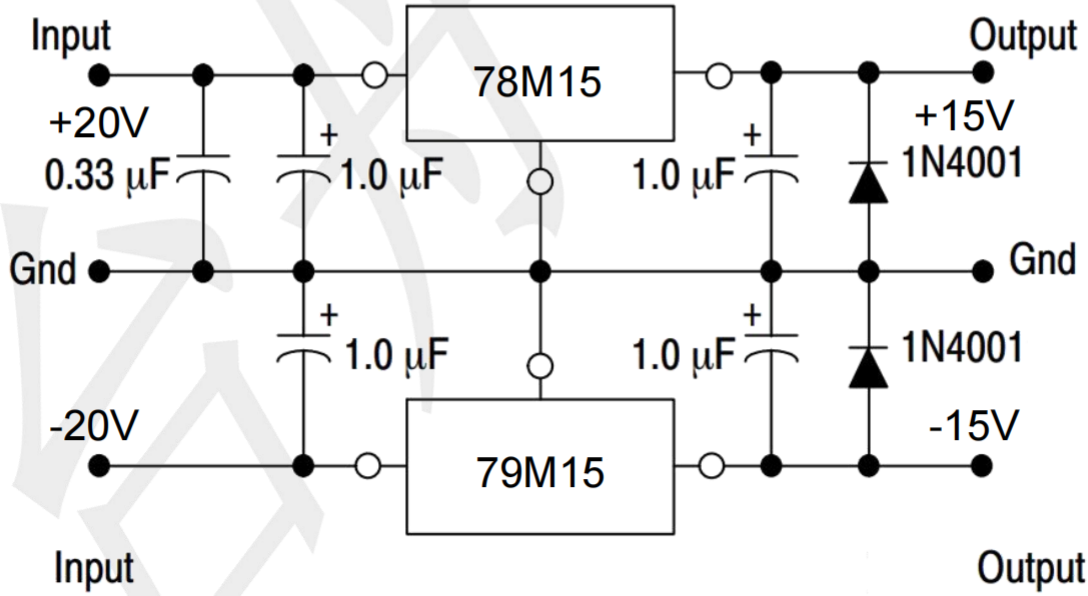

Typical Operating Characteristics (25 °C, unless otherwise noted)

Output Characteristics

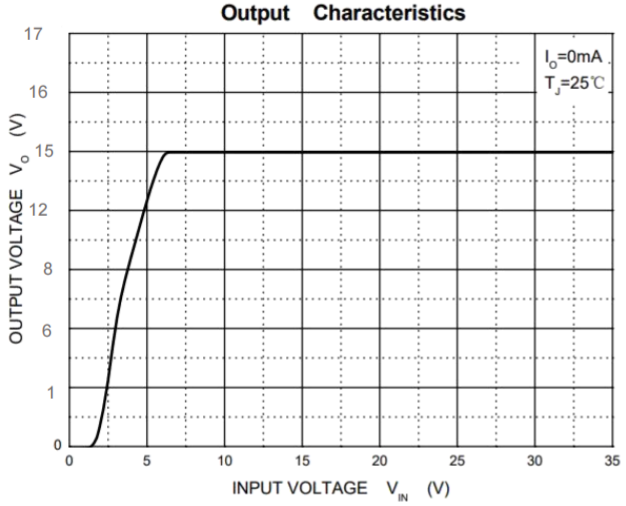

Dropout Characteristics

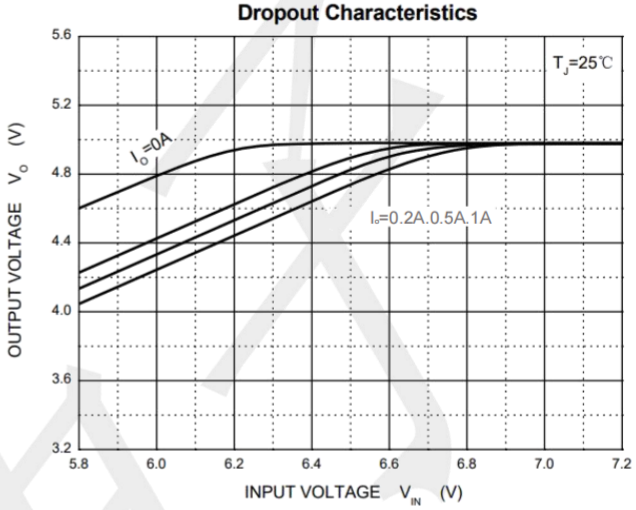

Quiescent Current

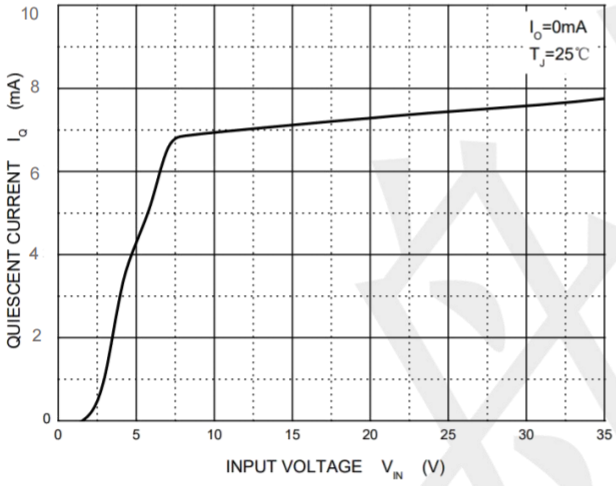

Current Cut-off Grid Voltage

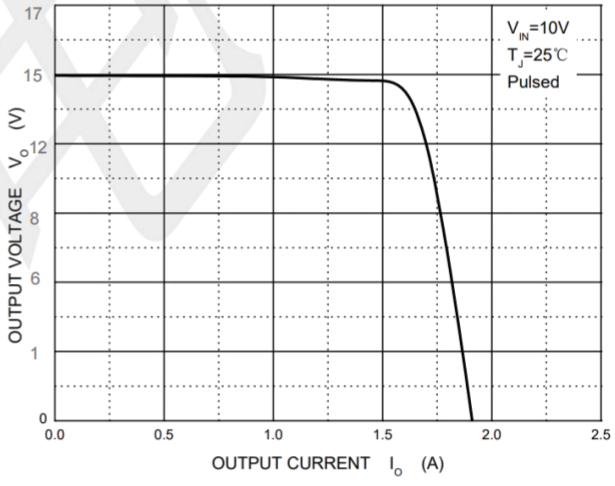

Output Voltage vs Junction Temperature

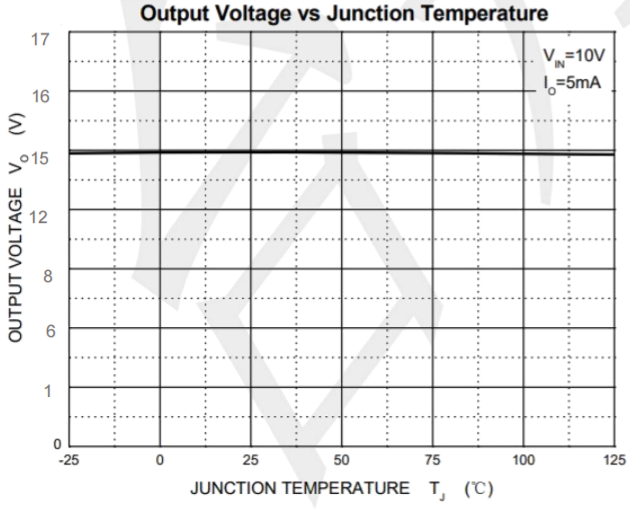

Power Derating Curve

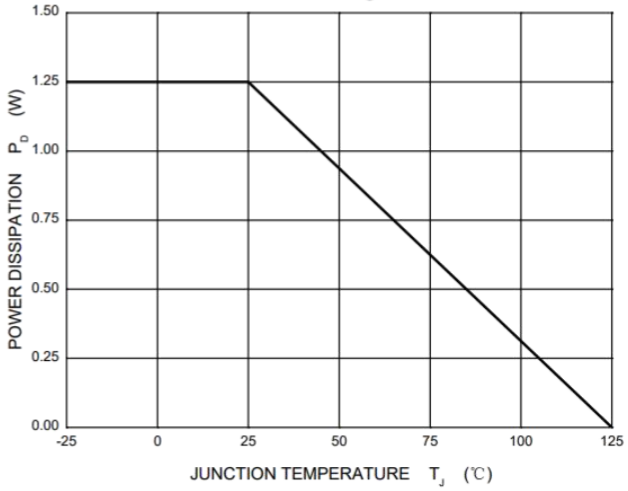

Package Outline Dimensions (unit: mm)

TO-252-2L

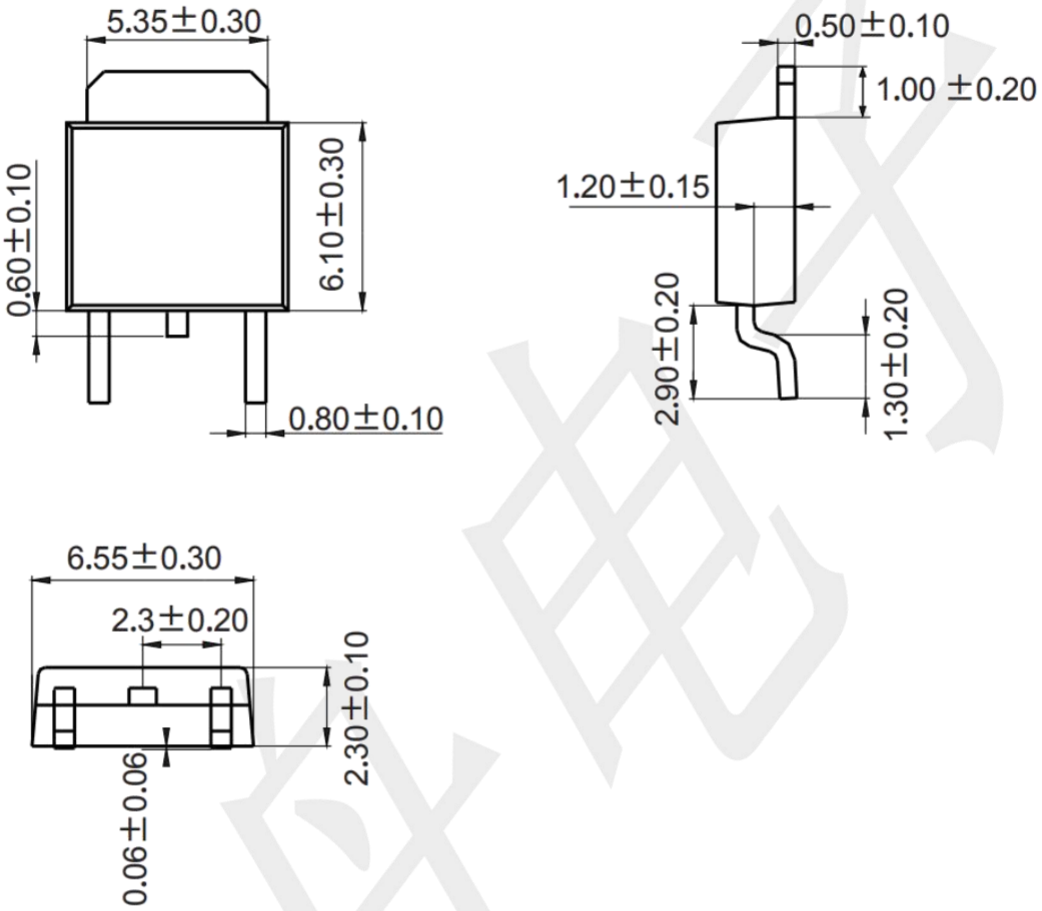

Mounting Pad Layout (unit: mm)

