REVISION RECORD				
REV	ECO	DESCRIPTION	DRΓ	CHKD

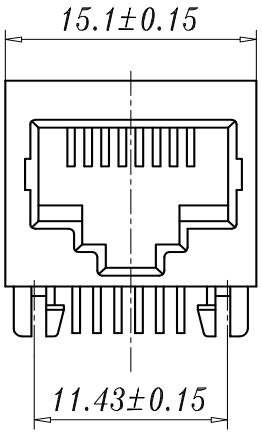

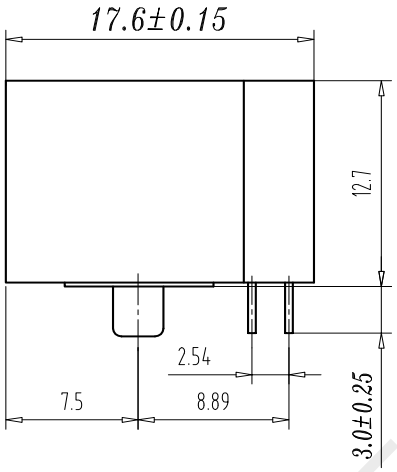

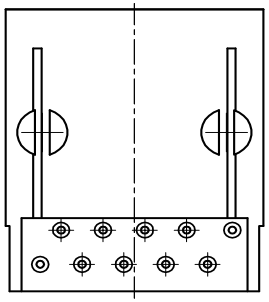

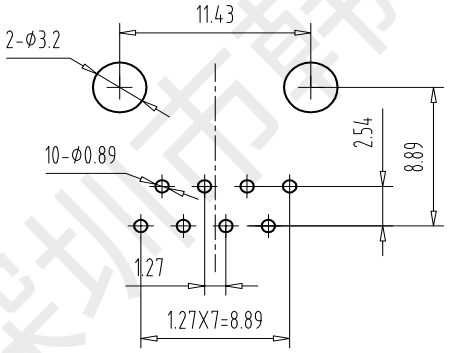

PC Board Layout

Component Side Shown

Specifications:

1. Electrical:
   Rated voltage and current: 125V 1.5A Max
   Contact resistance: 50mΩ Max Initial state
   100mΩ Max End state
   Insulation resistance: 500MΩ Min
   Withstand Voltage: AC 1000V
2. Mechanical:
   Durability: 750 Cycles 20-30Cycles/Min
3. Matorial:
   Housing: Glass Filled Polyester UL94V-0
   Contact: Phosphor Bronze
   Plating: Gold Plating Fu“ 50u ”Over Nickel
4. Temperature Range: -25℃ to +85℃.
5. Welding temperature: 260±5℃ 3±0.5S

MM (INCH)	DFTO: 黄彬	DATE: 2017.05.03	深圳市韩下电子有限公司
TOLERANCES EXCEPT AS NOTED	CHKD: 张伟	DATE: 2017.05.03	
MM .0 ± 0.15 ± .00 ± 0.075 ± .000 ± 0.05 ±	MFO:	DATE:	TITLE: HX-RJ45 90 5621-1x1 10P8C S
ANGLES ± 0.5	APPVL: 罗小春	DATE: 2017.05.03	
THIRD ANGLE PROJECTION	MATERIAL :		DRAWING NO. TE56A1001 /PART NO.
DETACHED LISTS	QT'Y :		SIZE A3 REV 0
	FINISH :		DO NOT SCALE DRAWING SHEET X OF Y
	SCALE :		

深圳市韩下电子有限公司

深圳市韩下电子有限公司
Shenzhen Hanxia Electronic Co., Ltd
Tel: 0755-23086569

承　认　书

SPECIFICATION FOR APPROVAL

产 品 编 码
Material code: _____

产品名称 Project：以太网连接器

规格型号 Part No：HX-RJ45 90 5621-1x1 10P8C S

贵公司承认印 Approal slgnatures

料 号/Part No.	签　章/Signatures

日期 Date:

拟制/Drawn	黄彬	深圳市韩下电子有限公司 工程专用章
审核/Check	张伟	
批准/Approved	罗小春	

深圳市韩下电子有限公司