Product data sheet

Automation technology - Sensors and actuators

Product description	**M12 Female cable connector, Contacts: 8, 5.5-8.6 mm, shieldable, screw clamp, IP68/IP69K, UL, Ecolab, stainless steel**
Area	**series 713**
Part no.	**99 1486 992 08**

Illustration



Scale drawing

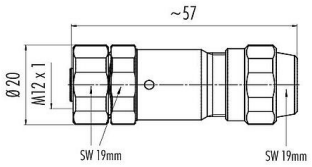

Contact arrangement (Plug-in side)

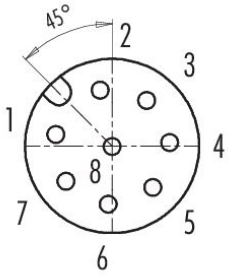

You can find the assembly instructions on the next page.

Technical data

General features

Part no.	99 1486 992 08
Connector design	Female cable connector
Type standard	DIN EN 61076-2-101
Version	Connector socket straight
Connector locking system	screw
Termination	screw clamp
Degree of protection	IP68/IP69K
Cross-sectional area	max. 0.50 mm² / AWG 20
Cable outlet	5.5-8.6 mm
Temperature range from/to	-40 °C / 85 °C
Mechanical operation	> 500 Mating cycles
Additional information	stainless steel
Weight (g)	59.31
Customs tariff number	85369010
Country of Origin	DE

Electrical parameters

Rated voltage	30 V
Rated impulse voltage	800 V
Rated current	2.0 A
Insulation resistance	> 10^8 Ω
Pollution degree	3

Product data sheet

Automation technology - Sensors and actuators

Product description	**M12 Female cable connector, Contacts: 8, 5.5-8.6 mm, shieldable, screw clamp, IP68/IP69K, UL, Ecolab, stainless steel**
Area	**series 713**
Part no.	**99 1486 992 08**

Overvoltage category	II
Insulating material group	III
EMC compliance	shieldable
Shield connection	Shielding ring

Material

Housing material	Stainless steel
Contact body material	PA66 (UL94 HB)
Contact material	CuZn (brass)
Contact plating	Au (gold)
Locking material	Stainless steel
REACH SVHC	CAS 7439-92-1 (Lead)
SCIP number	d248307e-4280-4e8a-a496-a14075865ef3

Authorization/approvals

Approvals	UL, Ecolab

Classifications

eCl@ss 11.1	27-44-01-02
ETIM 9.0	EC002635

Product data sheet

Automation technology - Sensors and actuators

Product description	**M12 Female cable connector, Contacts: 8, 5.5-8.6 mm, shieldable, screw clamp, IP68/IP69K, UL, Ecolab, stainless steel**
Area	**series 713**
Part no.	**99 1486 992 08**

Assembly instructions

1. Bead pressing screw, pressing piece, seal and shielding ring to cable.
2. Dismantle cable.
3. Strip single wires, shorten shield and revert to shielding ring.
4. Thread single wires through sleeve, mount shielding ring, seal and pressing piece. Slightly tighten pressing screw to fix the cable.
5. Bead insulating sleeve and screw on single wires:
   4, 5 pole: 0.4 Nm, 8 pole: 0.2 Nm.
6. Screw sleeve to male/female insert.
7. Tighten pressing screw.

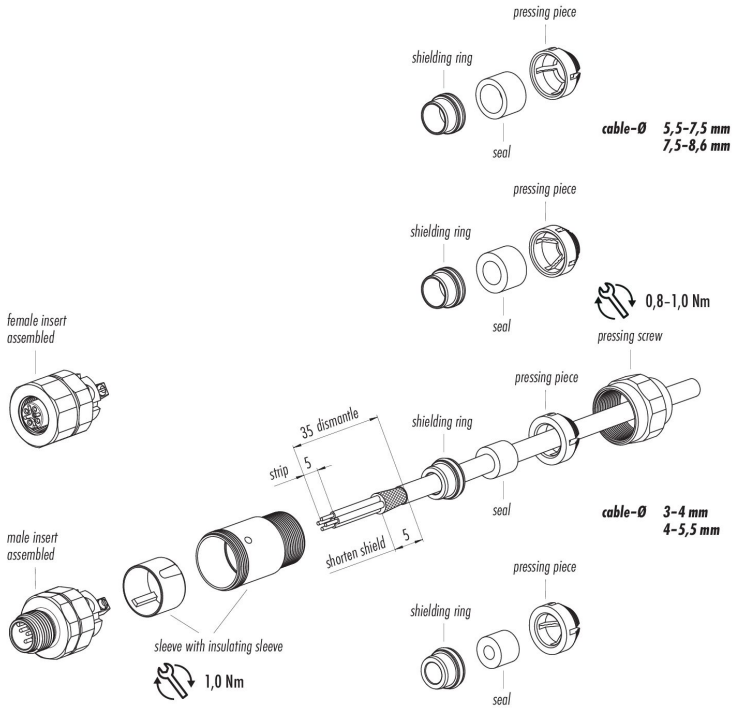

Date: 05.08.2024

Product data sheet

Automation technology - Sensors and actuators

Product description	**M12 Female cable connector, Contacts: 8, 5.5-8.6 mm, shieldable, screw clamp, IP68/IP69K, UL, Ecolab, stainless steel**
Area	**series 713**
Part no.	**99 1486 992 08**

Security notices

The connector must not be plugged or unplugged under load. Non-observance and improper use can result in personal injury.

The connectors have been developed for applications in plant engineering, control and electrical equipment construction. The user is responsible for checking whether the connectors can also be used in other areas of application.

To protect against unintentional opening of the connector, the thread between the housing and the connector head must be secured with a suitable cyanoacrylate adhesive when used in circuits with voltages dangerous to the touch. This does not apply to connectors used in SELV and PELV circuits according to IEC 61140 (EN 61140, VDE 0140-1).

Connectors which are used in circuits with voltages dangerous to the touch may only be installed and used by, or under the supervision of, persons with electrical engineering training, taking into account the applicable regulations and standards.

The user must take suitable safety precautions to ensure that the connector cannot be accidentally disconnected.

Plug connectors with enclosure protection IP67 and IP68 are not suitable for use under water. When used outdoors, the plug connectors must be protected separately against corrosion. For further information on the IP protection classes, please refer to the "Technical Information" download centre.

The plug connector is not suitable for mains voltages Please observe the pollution degree and the overvoltage category. For further information, please refer to the download center "Technical Information".

To lock the cable connector with the device connector, the threaded ring is tightened "hand-tight" (approx. 60 cNm).

Unikeyic Electronics

Global Electronic Components Distributor

Click to view pricing, inventory, delivery, and lifecycle information:

Franz Binder:

09-3442-92-05 09-9749-20-03 79-3468-52-06 99 0975 102 03 99-0072-100-02 99-0096-100-05
99-0430-27-04 09-3432-500-04 09-3481-679-08 99-3376-100-04 99-3400-00-03 99-4929-00-08
09 3463 00 06 09-0981-00-04 99-0401-10-02 99-0429-314-04 99-9475-100-07 09-3491-90-12 04 0722 000
09 0137 70 04 09-0498-00-24 14402780 99-9115-00-05 09-3105-86-03 86 6919 0002 00703 09-0315-00-05
79 5001 20 04 99-0491-12-12 99-0609-00-04 99-4905-00-03