High Voltage Thick Film Chip Resistor
MCHVR Series



RoHS Compliant

Description

This specification applies to all sizes of rectangular-type fixed chip resistors with Ruthenium-base as material.

Features

- Highly reliable multilayer electrode construction
- Higher component and equipment reliability
- Excellent performance at high voltage
- Reduced size of final equipment

Applications

- Inverter
- Outdoor Equipments
- Converter
- Automotive Industry
- High Pulse Equipment

Construction

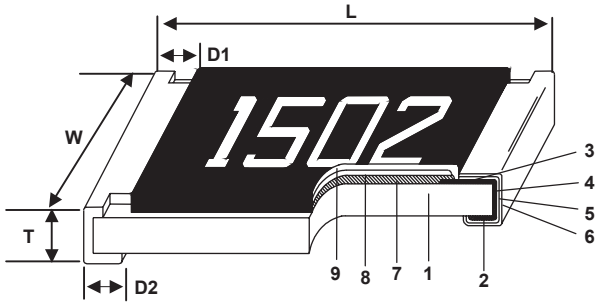

1	Alumina Substrate	4	Edge Electrode	7	Resistor Layer
2	Bottom Electrode	5	Barrier Layer	8	Primary Overcoat
3	Top Electrode	6	External Electrode	9	Secondary Overcoat

Dimensions

Type	Size (Inch)	L (mm)	W (mm)	T (mm)	D1 (mm)	D2 (mm)	Weight (g) (1000pcs)
MCHVR02	0402	1 ±0.05	0.5 ±0.05	0.35 ±0.05	0.2 ±0.1	0.2 ±0.1	0.62
MCHVR03	0603	1.6 ±0.1	0.8 ±0.1	0.45 ±0.1	0.3 ±0.2	0.3 ±0.2	2.042
MCHVR05	0805	2 ±0.1	1.25 ±0.1	0.5 ±0.1	0.35 ±0.2	0.4 ±0.2	4.368
MCHVR06	1206	3.1 ±0.1	1.55 ±0.1	0.55 ±0.1	0.5 ±0.25	0.5 ±0.2	8.947
MCHVR0A	2010	5 ±0.1	2.5 ±0.15	0.55 ±0.1	0.6 ±0.25	0.5 ±0.2	24.241
MCHVR12	2512	6.35 ±0.1	3.1 ±0.15	0.55 ±0.1	0.6 ±0.25	0.5 ±0.2	39.448

Standard Electrical Specifications

Item / Type	Power Rating at 70°C	Operating Temp. Range	Max. Operating Voltage	Max. Overload Voltage	Resistance Range		TCR (PPM/°C)
					±1% (E24~E96)	±5% (E24)	
MCHVR02 (0402)	1/16W	-55 ~ +155°C	100V	200V	39kΩ - 1MΩ		±100
					1.02MΩ - 10MΩ	1.1MΩ - 20MΩ	±200
					-	22MΩ - 100MΩ	±400
MCHVR03 (0603)	1/10W		200V	400V	56kΩ - 1MΩ		±100
					1.02MΩ - 10MΩ	1.1MΩ - 20MΩ	±200
					-	22MΩ - 100MΩ	±400
MCHVR05 (0805)	1/8W		400V	800V	100kΩ - 1MΩ		±100
					1.02MΩ - 10MΩ	1.1MΩ - 20MΩ	±200
					-	22MΩ - 100MΩ	±400
MCHVR06 (1206)	1/4W		500V	500V	100kΩ- 1MΩ		±100
					1.02MΩ - 10MΩ	1.1MΩ - 20MΩ	±200
					-	22MΩ - 100MΩ	±400
MCHVR0A (2010)	1/2W		2000V	3000V	51kΩ- 1MΩ		±100
					1.02MΩ - 20MΩ	1.1MΩ - 20MΩ	±200
					-	22MΩ - 100MΩ	±400
MCHVR12 (2512)	1W		3000V	4000V	30kΩ - 1MΩ		±100
					1.02MΩ - 20MΩ	1.1MΩ - 20MΩ	±200
					-	22MΩ - 100MΩ	±400

Operating Voltage=√(P×R) or Max. Operating Voltage listed above, whichever is lower.
Overload Voltage=2.5×√(P×R) or Max. Overload Voltage listed above, whichever is lower.

Environmental Characteristics

Item	Requirement		Test Method
	±1%	±5%	
Temperature Coefficient of Resistance (T.C.R.)	As Spec.		JIS-C-5201-1 4.8 IEC-60115-1 4.8 -55°C~+125°C, 25°C is the reference temperature
Short Time Overload	±(1% +0.05Ω)	±(2% +0.05Ω)	JIS-C-5201-1 4.13 IEC-60115-1 4.13 RCWV*2.5 or Max. Overload Voltage whichever is lower for 5 seconds
Insulation Resistance	≥10G		JIS-C-5201-1 4.6 IEC-60115-1 4.6 Max. Overload Voltage for 1 minute
Endurance	±(2% +0.1Ω)	±(3% +0.1Ω)	JIS-C-5201-1 4.25 IEC-60115-1 4.25.1 70±2°C, RCWV for 1000 hrs with 1.5 hrs “ON” and 0.5 hr “OFF”

Item	Requirement		Test Method
	±1%	±5%	
Damp Heat with Load	±(2% +0.1Ω)	±(3% +0.1Ω)	JIS-C-5201-1 4.24 IEC-60115-1 4.24 40±2°C, 90~95% R.H., RCWV for 1000 hrs with 1.5 hrs “ON” and 0.5 hr “OFF”
Dry Heat	±(1% +0.05Ω)	±(1.5% +0.1Ω)	JIS-C-5201-1 4.23 IEC-60115-1 4.23.2 at +155°C for 1000 hrs
Bending Strength	±(1% +0.05Ω)	±(1% +0.05Ω)	JIS-C-5201-1 4.33 IEC-60115-1 4.33 Bending once for 5 seconds 2010, 2512 sizes: 2mm, Other sizes: 3mm
Solderability	95% min. coverage		JIS-C-5201-1 4.17 IEC-60115-1 4.17 245±5°C for 3 seconds
Resistance to Soldering Heat	±(0.5% +0.05Ω)	±(1% +0.05Ω)	JIS-C-5201-1 4.18 IEC-60115-1 4.18 260±5°C for 10 seconds
Voltage Proof	No breakdown or flashover		JIS-C-5201-1 4.7 IEC-60115-1 4.7 MCHVR02: 150V for 1 minute MCHVR03: 300V for 1 minute MCHVR05/MCHVR06/MCHVR0A/MCHVR12: 500V for 1 minute
Leaching	Individual leaching area ≦5% Total leaching area ≦10%		JIS-C-5201-1 4.18 IEC-60068-2-58 8.2.1 260±5°C for 30 seconds
Rapid Change of Temperature	±(0.5% +0.05Ω)	±(1% +0.05Ω)	JIS-C-5201-1 4.19 IEC-60115-1 4.19 -55°C to +155°C, 5 cycles

RCWV(Rated Continuous Working Voltage)=√(P×R) or Max. Operating Voltage whichever is lower.

Storage Temperature : 15~28°C; Humidity < 80%RH

Derating Curve

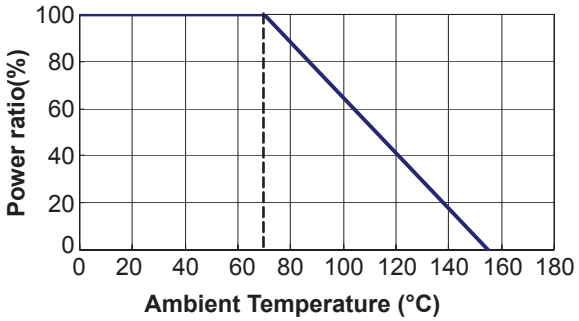

Recommend Land Pattern

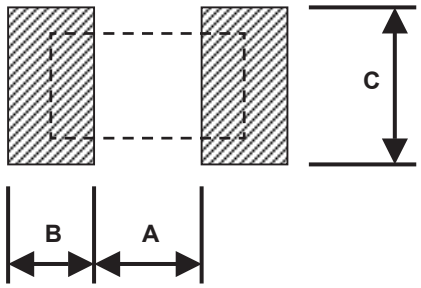

Type	A (mm)	B (mm)	C (mm)
MCHVR02	0.5	0.45	0.6
MCHVR03	0.9	0.6	0.9
MCHVR05	1.2	0.7	1.3
MCHVR06	2	0.9	1.6
MCHVR0A	3.8	0.9	2.8
MCHVR12	3.8	1.6	3.5

Soldering Condition

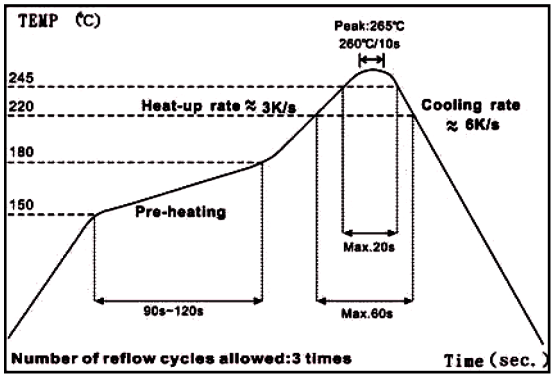

IR Reflow Soldering

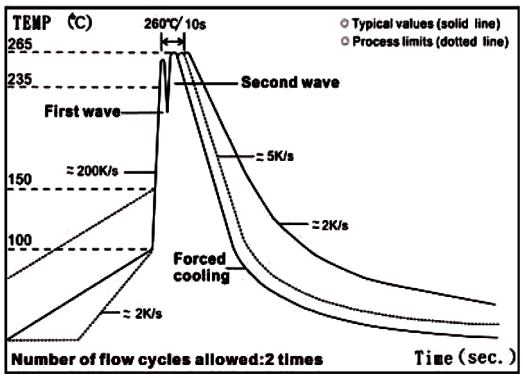

Wave Soldering (Flow Soldering)

(1) Time of IR reflow soldering at maximum temperature point 260°C : 10s
(2) Time of wave soldering at maximum temperature point 260°C : 10s
(3) Time of soldering iron at maximum temperature point 410°C : 5s

Packaging

Reel Specifications & Packaging Quantity

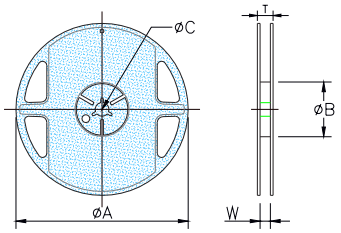

Type	Packaging Quantity		Tape Width	Reel Diameter	ΦA (mm)	ΦB (mm)	ΦC (mm)	W (mm)	T (mm)
MCHVR02	Paper	10K	8mm	7 inch	178.5 ±1.5	$60^{+1/-0}$	13 ±0.2	9 ±0.5	12.5 ±0.5
		20K	8mm	10 inch	254 ±1	100 ±0.5	13 ±0.2	9.5 ±0.5	13.5 ±0.5
		40K	8mm	13 inch	330 ±1	100 ±0.5	13 ±0.2	9.5 ±0.5	13.5 ±0.5

Type	Packaging Quantity		Tape Width	Reel Diameter	ΦA (mm)	ΦB (mm)	ΦC (mm)	W (mm)	T (mm)
MCHVR03	Pape	5K	8mm	7 inch	178.5 ±1.5	$60^{+1/-0}$	13 ±0.2	9 ±0.5	12.5 ±0.5
MCHVR05		10K	8mm	10 inch	254 ±1	100 ±0.5	13 ±0.2	9.5 ±0.5	13.5 ±0.5
MCHVR06		20K	8mm	13 inch	330 ±1	100 ±0.5	13 ±0.2	9.5 ±0.5	13.5 ±0.5
MCHVR0A	Embossed	4K	12mm	7 inch	178.5±1.5	$60^{+1/-0}$	13 ±0.5	13 ±0.5	15.5 ±0.5
MCHVR12		8K	12mm	10 inch	250 ±1	62 ±0.5	13 ±0.5	12.5 ±0.5	16.5 ±0.5

Paper Tape Specifications

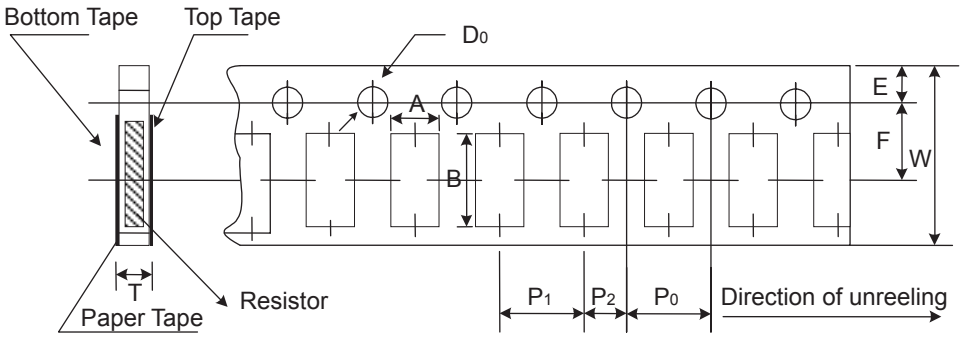

Type	A (mm)	B (mm)	W (mm)	E (mm)	F (mm)	P_0 (mm)	P_1 (mm)	P_2 (mm)	D_0 (mm)	T (mm)
MCHVR02	0.65 ±0.1	1.15 ±0.1	8 ±0.2	1.75 ±0.1	3.5 ±0.05	4 ±0.1	2 ±0.05	2 ±0.05	1.5 +0.1,-0	0.45 ±0.1
MCHVR03	1.1 ±0.1	1.9 ±0.1	8 ±0.2	1.75 ±0.1	3.5 ±0.05	4 ±0.1	4 ±0.05	2 ±0.05	1.5 +0.1,-0	0.7 ±0.1
MCHVR05	1.6 ±0.1	2.4 ±0.2	8 ±0.2	1.75 ±0.1	3.5 ±0.05	4 ±0.1	4 ±0.05	2 ±0.05	1.5 +0.1,-0	0.85 ±0.1
MCHVR06	1.9 ±0.1	3.5 ±0.2	8 ±0.2	1.75 ±0.1	3.5 ±0.05	4 ±0.1	4 ±0.05	2 ±0.05	1.5 +0.1,-0	0.85 ±0.1

Embossed Plastic Tape Specifications

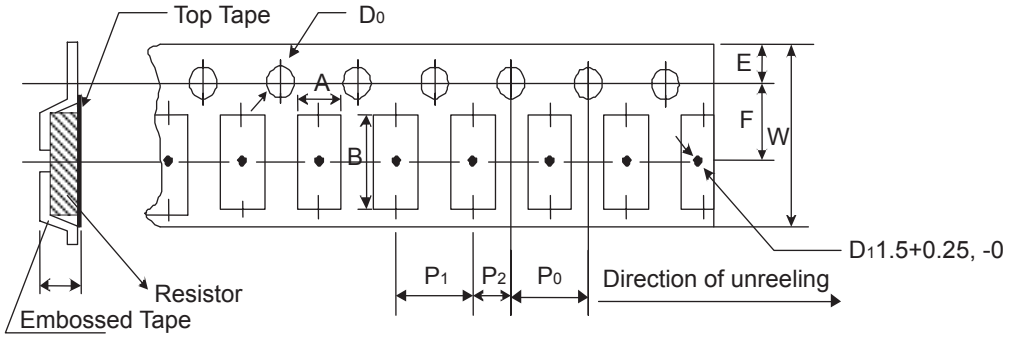

Type	A (mm)	B (mm)	W (mm)	E (mm)	F (mm)	P_0 (mm)	P_1 (mm)	P_2 (mm)	D_0 (mm)	T (mm)
MCHVR0A	2.8 ±0.1	5.5 ±0.1	12 ±0.3	1.75 ±0.1	5.5 ±0.05	4 ±0.1	4 ±0.1	2 ±0.05	1.5 +0.1, -0	1.2^{+0}
MCHVR12	3.5 ±0.1	6.7 ±0.1	12 ±0.3	1.75 ±0.1	5.5 ±0.05	4 ±0.1	4 ±0.1	2 ±0.05	1.5 +0.1, -0	1.2^{+0}

Marking

No Marking for 0402
1% for 0805/1206/2010/2512: 4 digits marking

Example

Resistance	49.9kΩ	100kΩ	1MΩ	4.99MΩ	10MΩ
Marking	4992	1003	1004	4994	1005

5% for 0603/0805/1206/2010/2512: 3 digits marking in E24
Example: 124=120kΩ 106=10MΩ (1st and 2nd are E24 code and 3rd code is multiplier)

E24 code	10	11	12	13	15	16	18	20	22	24	27	30	33	36	39	43	47	51	56	62	68	75	82	91

1% for 0603: 3 digits marking in E96

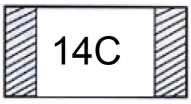

3 digits marking for Example: 75C=59kΩ 39E=2.49MΩ

Marking Table

Code	E96	Code	E96	Code	E96	Code	E96
01	100	25	178	49	316	73	562
02	102	26	182	50	324	74	576
03	105	27	187	51	332	75	590
04	107	28	191	52	340	76	604
05	110	29	196	53	348	77	619
06	113	30	200	54	357	78	634
07	115	31	205	55	365	79	649
08	118	32	210	56	374	80	665
09	121	33	215	57	383	81	681
10	124	34	221	58	392	82	698
11	127	35	226	59	402	83	715
12	130	36	232	60	412	84	732
13	133	37	237	61	422	85	750
14	137	38	243	62	432	86	768
15	140	39	249	63	442	87	787
16	143	40	255	64	453	88	806
17	147	41	261	65	464	89	825
18	150	42	267	66	475	90	845
19	154	43	274	67	487	91	866
20	158	44	280	68	499	92	887
21	162	45	287	69	511	93	909

Code	E96	Code	E96	Code	E96	Code	E96
22	165	46	294	70	523	94	931
23	169	47	301	71	536	95	953
24	174	48	309	72	549	96	976

Code	A	B	C	D	E	F	X	Y
Multiplier	10^0	10^1	10^2	10^3	10^4	10^5	10^{-1}	10^{-2}

Part Number Explanation

MCHVR 03 F T E X 1003

Series Type

Dimensions
- 02: 0402
- 03: 0603
- 05: 0805
- 06: 1206
- 0A: 2010
- 12: 2512

Resistance Tolerance
- F: ±1%
- J: ±5%

Packaging Code
- T: Taping Reel
- B: Bulk

TCR (PPM/°C)
- E: ±100
- F: ±200
- H: ±400

Power Rating
- Y: 1/16W
- X: 1/10W
- W: 1/8W
- V: 1/4W
- U: 1/2W
- T: 1W

Resistance
- 1003: 100kΩ
- 1004: 1MΩ
- 1005: 10MΩ

Important Notice : This data sheet and its contents (the "Information") belong to the members of the Premier Farnell group of companies (the "Group") or are licensed to it. No licence is granted for the use of it other than for information purposes in connection with the products to which it relates. No licence of any intellectual property rights is granted. The Information is subject to change without notice and replaces all data sheets previously supplied. The Information supplied is believed to be accurate but the Group assumes no responsibility for its accuracy or completeness, any error in or omission from it or for any use made of it. Users of this data sheet should check for themselves the Information and the suitability of the products for their purpose and not make any assumptions based on information included or omitted. Liability for loss or damage resulting from any reliance on the Information or use of it (including liability resulting from negligence or where the Group was aware of the possibility of such loss or damage arising) is excluded. This will not operate to limit or restrict the Group's liability for death or personal injury resulting from its negligence. Multicomp is the registered trademark of the Group. © Premier Farnell Limited 2016.

Unikeyic Electronics

Global Electronic Components Distributor

Click to view pricing, inventory, delivery, and lifecycle information:

multicomp:

MCLPR50V478M30X25 2213R-24G MC-SVT1-S06-G MC0402WGF499JTCE MCAL0410A1-471KU MCSR08X3300FTL MP006964 SMAJ160A-13-F CFS-TF-1818 MCMR08X2000FTL MC34589 MCWR08X39R0FTL SPC19989 MC0603B393K500CT MC36427 MCMR06X1004FTL MP005415 MUR1540 MC0603N100J201CT MCWF12R7150BTL CMS-DF-1825 MC0603N100F500CT MCMET 800MA 250V MCMF0W4FF8202A50 CF06332T/4/10 MC34747 MCMR50V335M4X7 MCSDC0603-560KU MCSDRH73B-681MHF MP006937