THIS DRAWING IS UNPUBLISHED. RELEASED FOR PUBLICATION -
© COPYRIGHT copyright_date - ALL RIGHTS RESERVED.

REVISIONS					
P	LTR	DESCRIPTION	DATE	DWN	APVD
	A3	REVISED PER ECR-16-015820	22NOV2016	O.C	D.Z

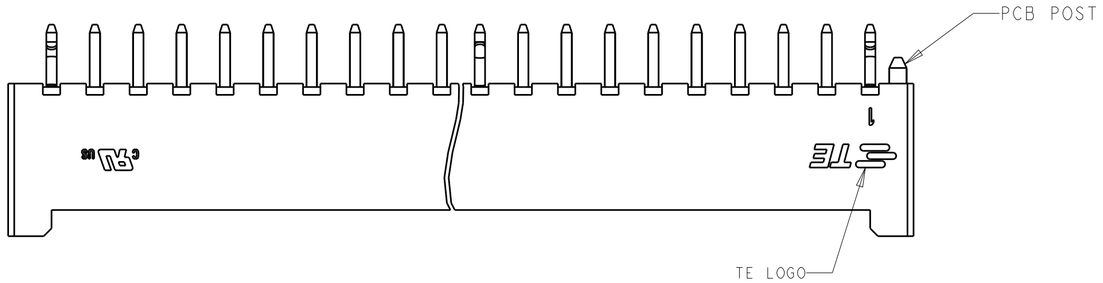

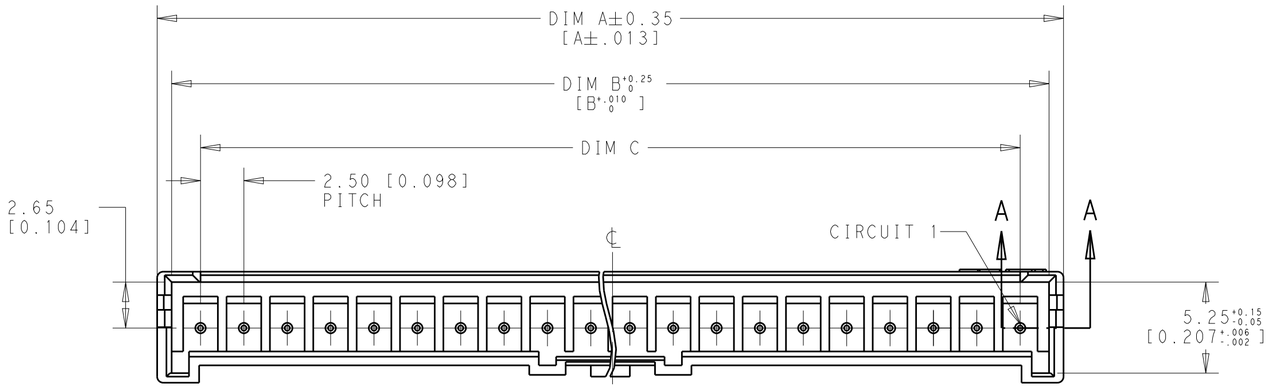

1 MATERIAL: HOUSING: THERMOPLASTIC, UL94 V0, COLOR: NATURAL.
TERMINAL: BRASS, NICKEL UNDER PLATING,
Tin PLATING ON PIN AREA.

2 CONTACT SOLDERTAIL KINK DIRECTION(BOARLOCK)
SEE BELOW TABLE.

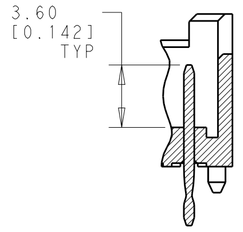

SECTION A-A

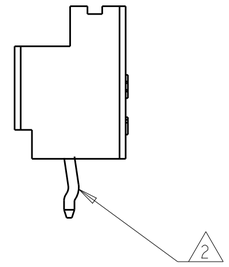

MIDDLE

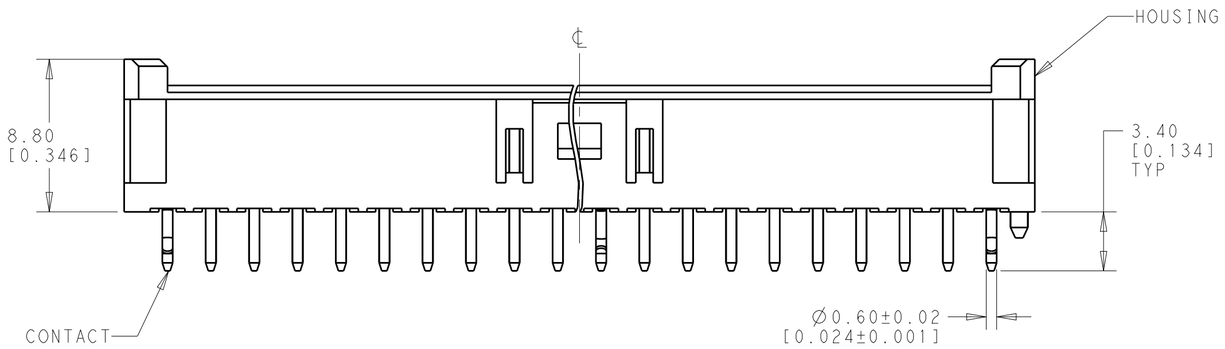

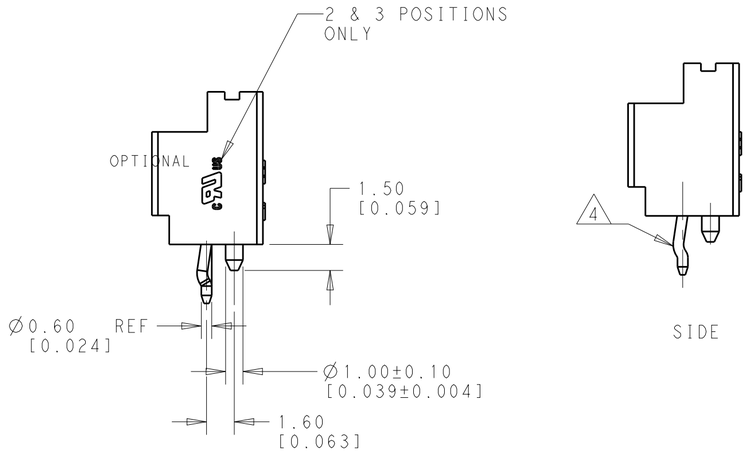

SIDE

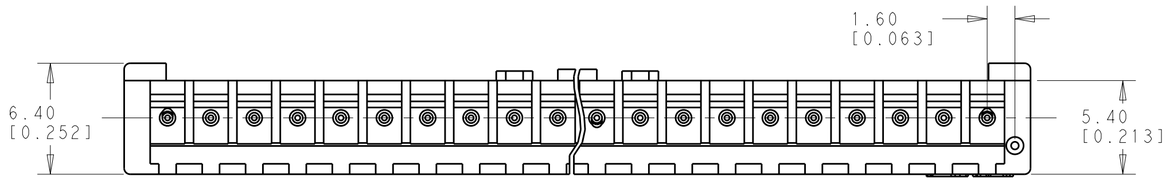

THIS DRAWING IS A CONTROLLED DOCUMENT.		DWN NAGALAKSHMI K 04JUN2016	TE Connectivity
DIMENSIONS: mm[INCHES]	TOLERANCES UNLESS OTHERWISE SPECIFIED: 0 PLC ±- 1 PLC ±.30 2 PLC ±.20 3 PLC ±- 4 PLC ±- ANGLES ±3°	CHK CHIARELLI DAVIDE 04JUN2016	NAME HEADER ASSEMBLY, VERTICAL, ECONOMY POWER, 2.5mm CENTERLINE
		APVD CHIARELLI DAVIDE 04JUN2016	
		PRODUCT SPEC 108-2418	
		APPLICATION SPEC 114-13315	SIZE A2 / CAGE CODE 00779 / DRAWING NO C-1969730 / RESTRICTED TO -
MATERIAL - -	FINISH - -	WEIGHT -	CUSTOMER DRAWING / SCALE 4:1 / SHEET 1 OF 2 / REV A3

THIS DRAWING IS UNPUBLISHED. RELEASED FOR PUBLICATION -
© COPYRIGHT copyright_date - ALL RIGHTS RESERVED.

REVISIONS					
P	LTR	DESCRIPTION	DATE	DWN	APVD
	-	SEE SHEET 1	-	-	-

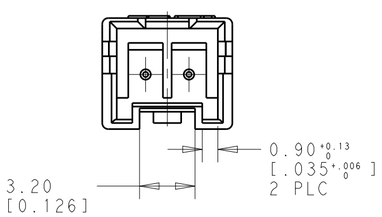

2 POSITION

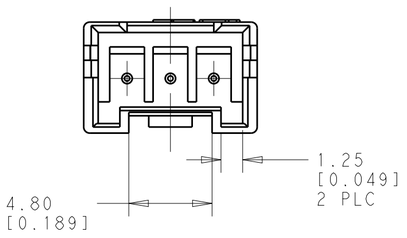

3 POSITION

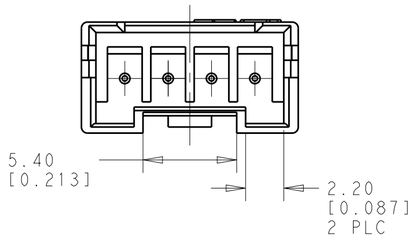

4 POSITION

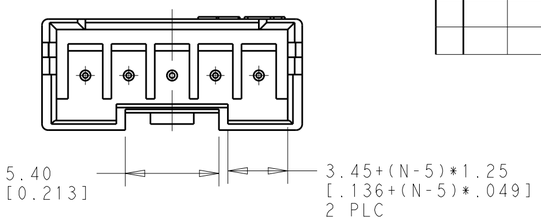

N= 5 THRU 20 POSITION

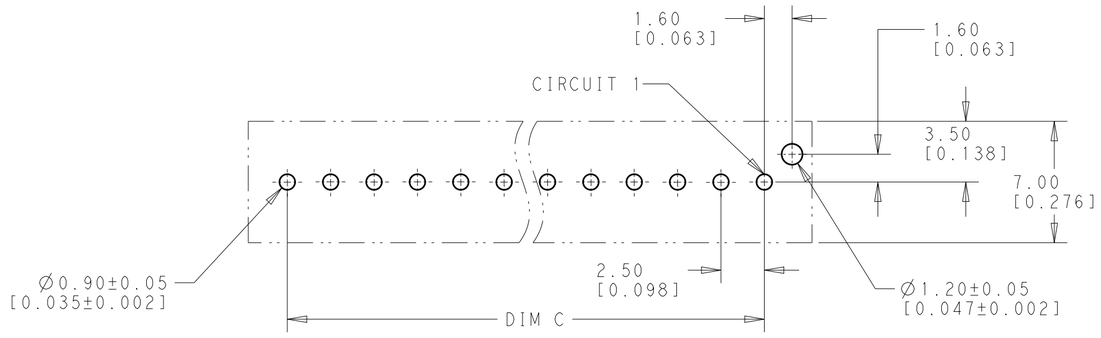

RECOMMENDED PCB LAYOUT

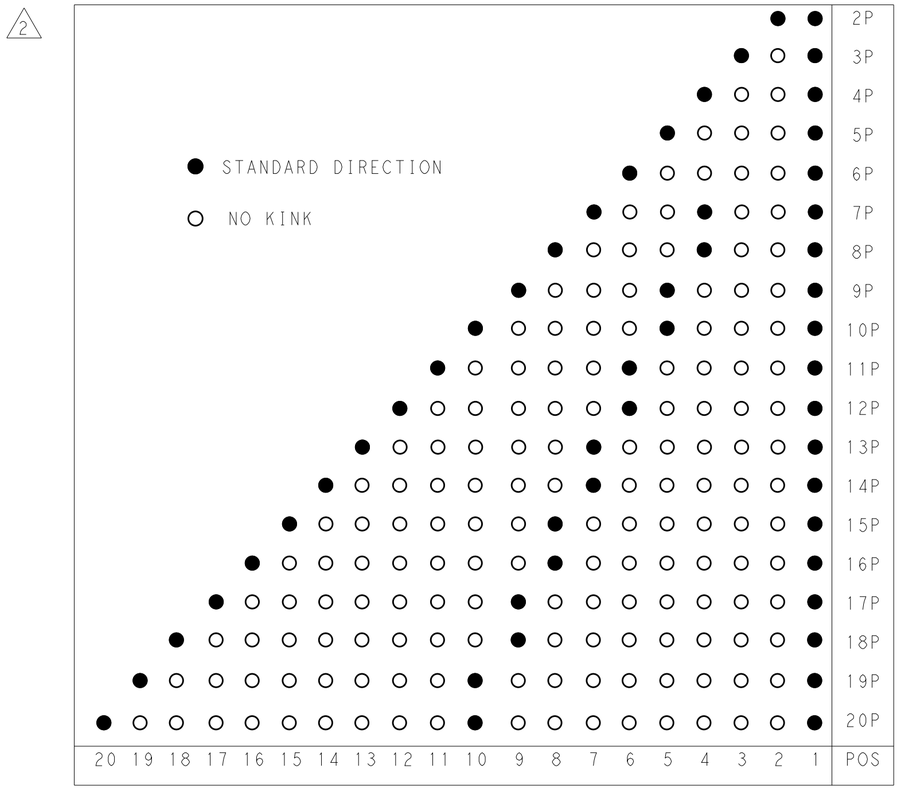

DIM C	DIM B	DIM A	POS	PART NO
47.5 [1.870]	50.83[2.001]	52.5 [2.067]	20	2-1969730-0
45.0 [1.772]	48.33[1.903]	50.0 [1.968]	19	1-1969730-9
42.5 [1.673]	45.83[1.804]	47.5 [1.870]	18	1-1969730-8
40.0 [1.575]	43.33[1.706]	45.0 [1.772]	17	1-1969730-7
37.5 [1.476]	40.83[1.607]	42.5 [1.673]	16	1-1969730-6
35.0 [1.378]	38.33[1.510]	40.0 [1.575]	15	1-1969730-5
32.5 [1.280]	35.83[1.411]	37.5 [1.476]	14	1-1969730-4
30.0 [1.181]	33.33[1.312]	35.0 [1.378]	13	1-1969730-3
27.5 [1.083]	30.83[1.214]	32.5 [1.280]	12	1-1969730-2
25.0 [.984]	28.33[1.115]	30.0 [1.181]	11	1-1969730-1
22.5 [.886]	25.83[1.016]	27.5 [1.083]	10	1-1969730-0
20.0 [.787]	23.33[.919]	25.0 [.984]	9	1969730-9
17.5 [.689]	20.83[.820]	22.5 [.886]	8	1969730-8
15.0 [.591]	18.33[.722]	20.0 [.787]	7	1969730-7
12.5 [.492]	15.83[.623]	17.5 [.689]	6	1969730-6
10.0 [.395]	13.33[.525]	15.0 [.591]	5	1969730-5
7.5 [.295]	10.83[.426]	12.5 [.492]	4	1969730-4
5.0 [.197]	8.33[.328]	10.0 [.395]	3	1969730-3
2.5 [.098]	5.83[.229]	7.5 [.295]	2	1969730-2

THIS DRAWING IS A CONTROLLED DOCUMENT.

DIMENSIONS: mm[INCHES]

TOLERANCES UNLESS OTHERWISE SPECIFIED:
0 PLC ±-
1 PLC ±.30
2 PLC ±.20
3 PLC ±-
4 PLC ±-
ANGLES ±3°

MATERIAL -
-

FINISH -
-

DWN 04JUN2016 NAGALAKSHMI K
CHK 04JUN2016 CHIARELLI DAVIDE
APVD 04JUN2016 CHIARELLI DAVIDE

PRODUCT SPEC 108-2418
APPLICATION SPEC 114-13315
WEIGHT -

CUSTOMER DRAWING

TE Connectivity

NAME HEADER ASSEMBLY, VERTICAL, ECONOMY POWER, 2.5mm CENTERLINE
-

SIZE	CAGE CODE	DRAWING NO	RESTRICTED TO
A2	00779	C-1969730	-

SCALE 4:1 SHEET 2 OF 2 REV A3

Unikeyic Electronics

Global Electronic Components Distributor

Click to view pricing, inventory, delivery, and lifecycle information:

TE Connectivity:

141991-2 2377783-2 2380312-2 3430B2F51RTDF U5254-000005-030PA 1-962915-1 1743455-2 ROX05SJ18R SBCHE154R7K SBCHE64R7K 1903112-2 917696-1 175977-2 2005330-1 3631B101LL 936348-1 MPT100C18RF 3-1393225-0 650075-000 TE50BR39J SMW73R0JT 1-794222-0 1969656-1 2-292161-3 CPF0402B37K4E1 CRGCQ2010J3K3 RH73H2A40MKTN 1393431-1 2310537-1 2834055-1