TECH PUBLIC
台舟电子

ESD3V3U4ULC-P(2.5x1.0)

4-Line Uni-directional TVS Diode

www.sot23.com.tw

Features

- Ultra low capacitance: 0.3pF typical (I/O to I/O)
- Ultra low leakage: nA level
- Low operating voltage: 3.3V
- Low clamping voltage
- Up to 4 data lines and one power line protects
- Complies with following standards:
  - IEC 61000-4-2 (ESD) immunity test
    - Air discharge: ±25kV
    - Contact discharge: ±20kV
  - IEC61000-4-4 (EFT) 40A (5/50ns)
  - IEC61000-4-5 (Lightning) : 4A(8/20μs)
- ROHS Compliant

Mechanical Characteristics

- Package: DFN2510-10 (2.5×1.0×0.5mm)
- Ultra low leakage: nA level
- Case Material: "Green" Molding Compound.
- UL Flammability Classification Rating 94V-0
- Moisture Sensitivity: Level 3 per J-STD-020
- Terminal Connections: See Diagram Below

Applications

- High Definition Multimedia Interface (HDMI)
- Digital Visual Interface (DVI)
- Unified Display Interface (UDI)
- MDDI Ports
- PCI Express
- Serial ATA

Ordering Information

Part Number	Qty per Reel	Reel Size
ESD3V3U4ULC-P(2.5x1.0)	3000	7″

Dimensions and Pin Configuration

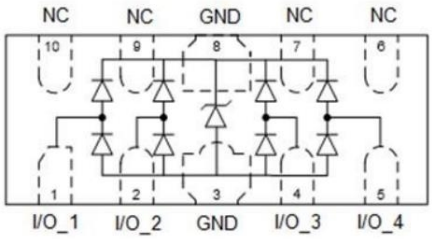

Marking: (3324,3324P,118xy)

xy=date code

Absolute Maximum Ratings (Tamb=25°C unless otherwise specified)

Parameter	Symbol	Value	Unit
Peak Pulse Power（tp=8/20μs） (VCC-GND)	P_{PP}	70	W
ESD per IEC 61000−4−2 (Air) ESD per IEC 61000−4−2 (Contact)	V_{ESD}	±25 ±20	kV
Operating Temperature Range	T_J	−55 to +125	°C
Storage Temperature Range	Tstg	−55 to +150	°C

Electrical Characteristics (TA=25°C unless otherwise specified)

Parameter	Symbol	Min	Typ	Max	Unit	Test Condition
Reverse Working Voltage	V_{RWM}			3.3	V	
Breakdown Voltage	V_{BR}	3.6	4	5.5	V	I_T = 1mA
Reverse Leakage Current	I_R			0.06	μA	V_{RWM} = 3.3V
Clamping Voltage	V_C			15	V	I_{PP} = 4A (8 x 20μs pulse) any I/O pin to ground
Junction Capacitance	C_J		0.3	0.4	pF	VR = 0V, f = 1MHz, between I/O pins
Junction Capacitance	C_J			0.8	pF	VR = 0V, f = 1MHz, any I/O pin to ground

Characteristic Curves

Fig1. 8/20μs Pulse Waveform

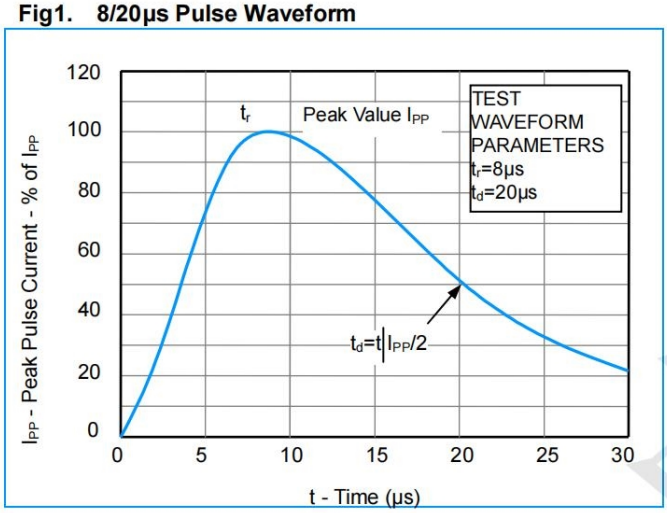

Fig2. ESD Pulse Waveform (according to IEC 61000-4-2)

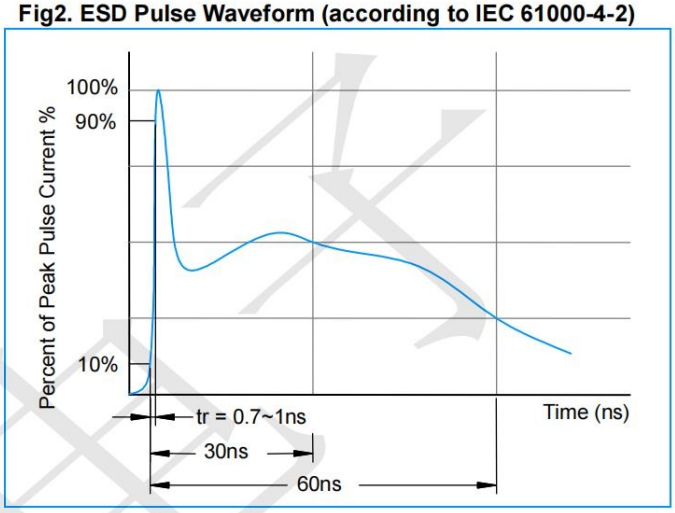

Fig3. Non - Repetitive Peak Pulse Power vs. Pulse Time

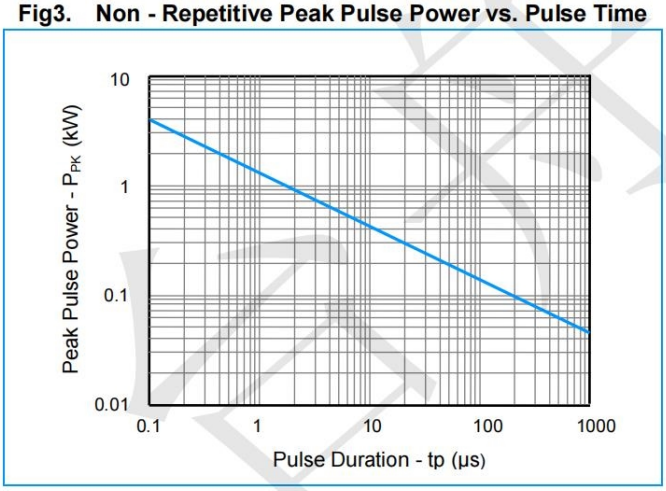

Application Information

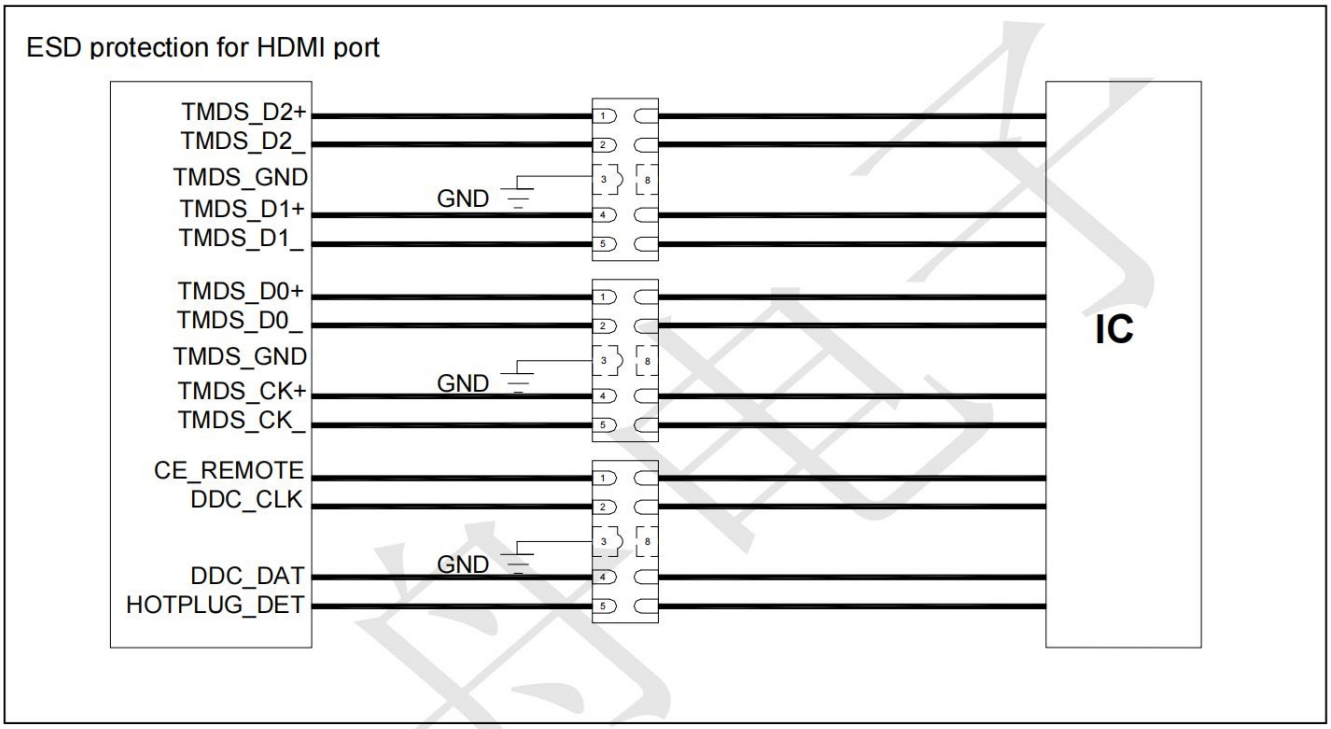

Outline Drawing - DFN2510-10

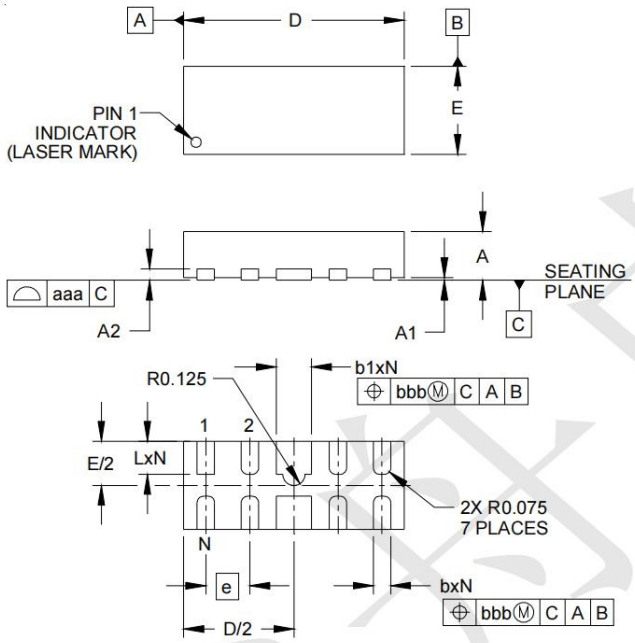

DIM	DIMENSIONS					
	INCHES			MILLIMETERS		
	MIN	NOM	MAX	MIN	NOM	MAX
A	.020	.023	.026	0.50	0.58	0.65
A1	0.00	.001	.002	0.00	0.03	0.05
A2		(.005)			(0.13)	
b	.006	.008	.010	0.15	0.20	0.25
b1	.014	.016	.018	0.35	0.40	0.45
D	.094	.098	.102	2.40	2.50	2.60
E	.035	.039	.043	0.90	1.00	1.10
e		.020 BSC			0.50 BSC	
L	.012	.015	.017	0.30	0.38	0.425
N		8			8	
aaa		.003			0.08	
bbb		.004			0.10	

Land Pattern - DFN2510-10

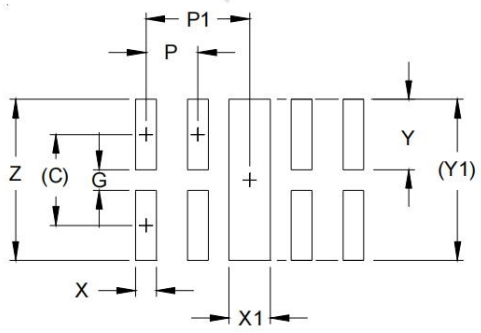

DIM	DIMENSIONS	
	INCHES	MILLIMETERS
C	(.034)	(0.875)
G	.008	0.20
P	.020	0.50
P1	.039	1.00
X	.008	0.20
X1	.016	0.40
Y	.027	0.675
Y1	(.061)	(1.55)
Z	.061	1.55

Unikeyic Electronics

Global Electronic Components Distributor

Click to view pricing, inventory, delivery, and lifecycle information:

TECH PUBLIC:

IRFR2405TRPBF-TP SI3932DV TPD1213A-02SM TPAPX809S-31SA TPDMG6602SVT TPESD0402G08V TPESD0504S6-A TPSPX3819M5-L-3-3 SN7002W BSN20W DMP6350S FDC6301N-TP LTH7 QM3003J-TP DDTA143ZCA TPADM809LAKSZ TPFMMT493 TPS7B6950DBVR-TP TPZVN3320FTA FDMS7670AS-TP TPB1A30-123 TPESD5311N TPS3809L30DBVR-TP TPZXMP3A13FTA BV15C ESD5B5.0ST1G-P TPGC12C-1 TPWSB5557Z TPADM809SAKSZ TPB05A40-323