REV	
B	DT04-12P*-BL05

REVISIONS			
SYM	DESCRIPTION	DATE	APPROVED
NC	NEW RELEASE PER E.O. P17561	12-28-01	R.D.R.
A	REVISED PER E.O. P19925	7/30/08	R.D.R.
B	REVISED PER E.O. P20438	5-18-10	RDR

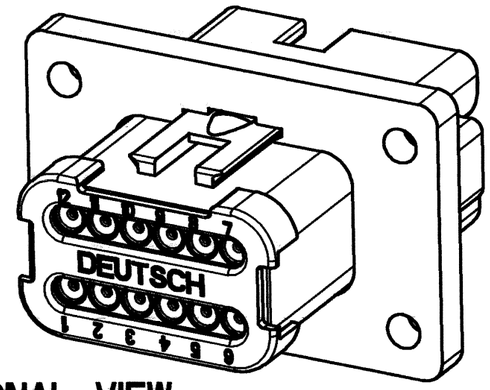

3-DIMENSIONAL VIEW

CONTACT SIZE	MIN. INSUL O.D.	MAX. INSUL O.D.	WIRE RANGE △3 [mm²] REF ONLY
16	.088 [2.24]	.145 [3.68]	14-20 AWG [2.0-0.5]

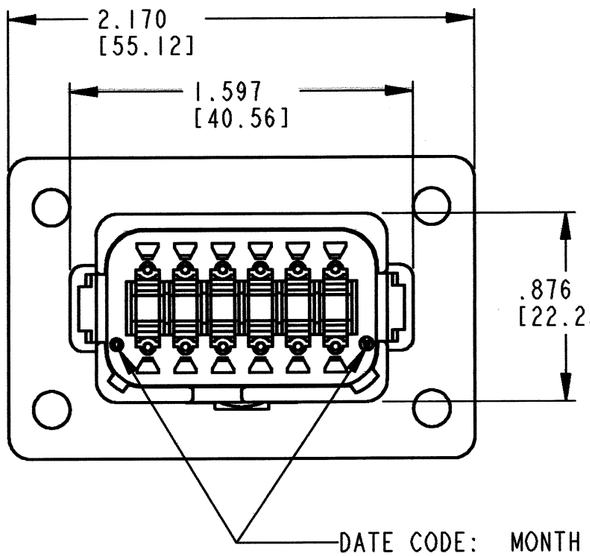

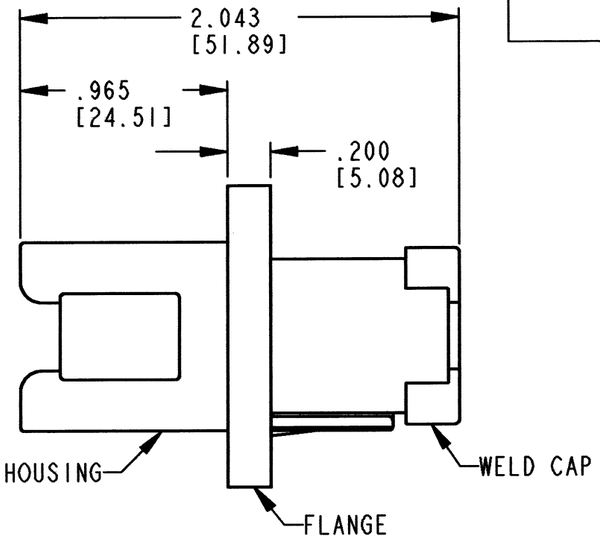

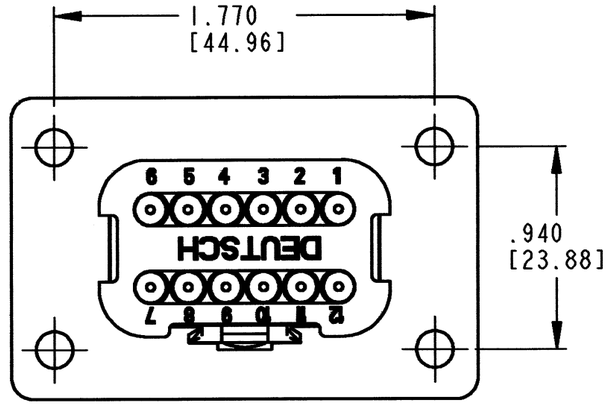

DATE CODE: MONTH IS REPRESENTED BY SEQUENTIAL ALPHA CHARACTERS. EX: A = JANUARY
YEAR IS REPRESENTED BY LAST NUMERICAL DIGIT. EX: 0 = 2000.

5. CONNECTOR MATERIAL IS PLASTIC AND SEAL IS RUBBER.

4. THIS RECEPTACLE MATES WITH DT06-12S*-**** PLUG.
(* = KEY ARR. A,B,C,OR D, **** = ALL MODIFICATIONS)
CONSULT FACTORY FOR MODIFICATIONS.

△3. FOR CONTACTS AND WIRE PERFORMANCE AND APPLICATION CHARACTERSTICS, SEE ENVELOPE DRAWINGS 0425-015-0000 AND 0425-017-0000.

2. DIMENSIONS ARE ±.025 [0.64] UNLESS OTHERWISE SPECIFIED.

NOTES: 1. DIMENSIONS ARE IN INCHES [MILLIMETERS].

	SIGNATURE & DATE
DR	T. YOHANNES 14DEC01
CHK	R.D.R. 5/14/10
PE	K. Mensah 2/22/10
APPD	S Brunds 5.4.10
SCALE	NONE WT ——

12 WAY RECEPTACLE
WITH ENHANCED KEY
AND FLANGE
KEY ARR. A,B,C,D
-BL05 MOD. DT SERIES

ENVELOPE

EP | MATL. CODE

DEUTSCH INDUSTRIAL
3850 INDUSTRIAL AVE.
HEMET, CA 92545

B | DT04-12P*-BL05

DWG SIZE | CODE 11139 | SHEET 1 OF 2

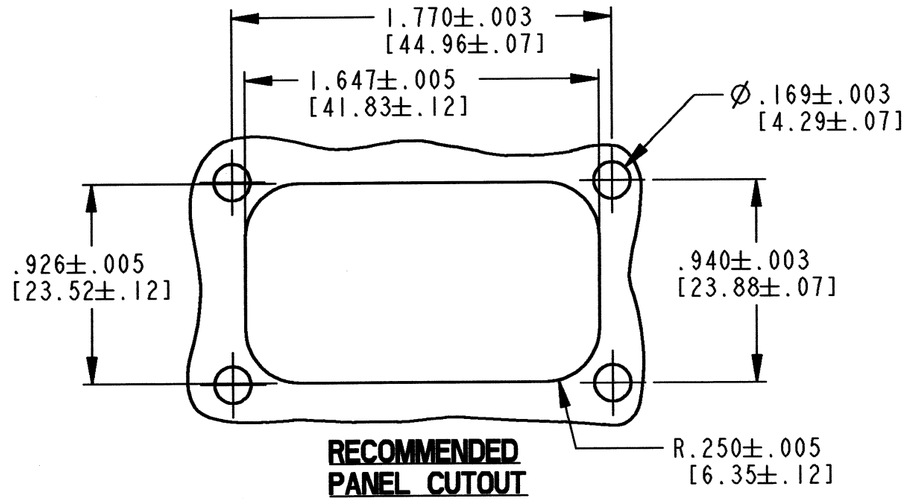

RECOMMENDED PANEL CUTOUT

REV	
B	DT04-12*-BL05

REVISIONS

SYM	DESCRIPTION	DATE	APPROVED
NC	NEW RELEASE PER E.O. P17561	12-28-01	R.D.R.
A	REVISED PER E.O. P19925	7/30/08	R.D.R.
B	REVISED PER E.O. P20438	5-18-10	RDR

KEY ARR.	COLOR	PART NUMBER
-A-	GRAY	DT04-12PA-BL05
-B-	BLACK	DT04-12PB-BL05
-C-	GREEN	DT04-12PC-BL05
-D-	BROWN	DT04-12PD-BL05

KEY ARRANGMENT -A-
DT04-12PA-BL05

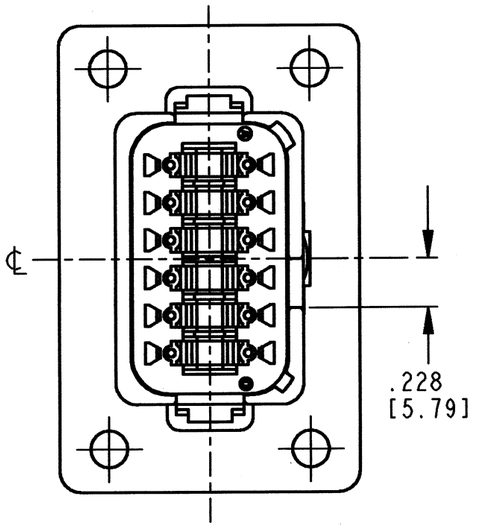

KEY ARRANGMENT -B-
DT04-12PB-BL05

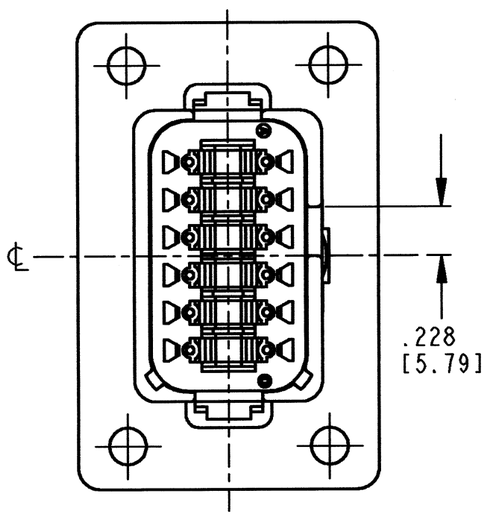

KEY ARRANGMENT -C-
DT04-12PC-BL05

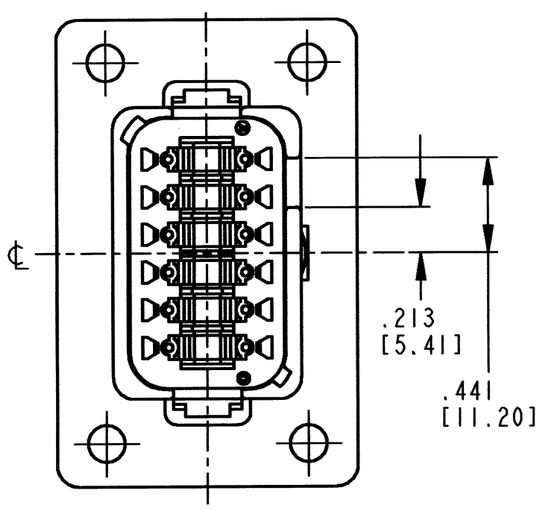

KEY ARRANGMENT -D-
DT04-12PD-BL05

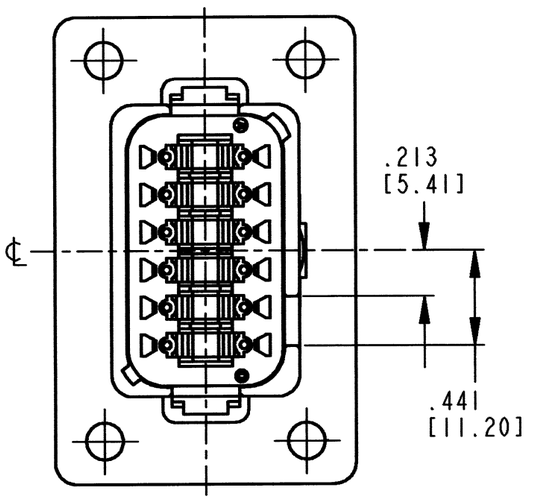

NOTES:

	SIGNATURE & DATE
DR	T. YOHANNES 27DEC01
CHK	R. McCol 5/14/10
PE	K. Mersey 2/22/10
APPD	S Beard 5.4.10
SCALE NONE	WT ——

12 WAY RECEPTACLE
WITH ENHANCED KEY
AND FLANGE
KEY ARR. A,B,C,D
-BL05 MOD. DT SERIES

ENVELOPE

EP | MATL. CODE

DEUTSCH INDUSTRIAL
3850 INDUSTRIAL AVE.
HEMET, CA 92545

B | DT04-12P*-BL05
DWG SIZE | CODE 11139 | SHEET 2 OF 2

Mouser Electronics

Authorized Distributor

Click to View Pricing, Inventory, Delivery & Lifecycle Information:

TE Connectivity:
DT04-12PC-BL05