182.72.104.66GE..-KRR-BSpannlager

Radial insert ball bearings GE50-XL-KRR-B (Series GE..-KRR-B)

spherical outer ring, location by eccentric locking collar, R seals on both sides

The datasheet is only an overview of dimensions and basic load ratings of the selected product. Please always observe all the guidelines in these overview pages. Further information is given on many products under the menu item "Description". You can also order comprehensive information via the Catalogue ordering system (https://www.schaeffler.de/content.schaeffler.de/en/news_media/index.jsp) or by telephone on +49 (91 32) 82 - 28 97.

d	50	mm	
D_{SF}	90	mm	
B_1	62,8	mm	
B	49,2	mm	
C	22	mm	
C_2	26,4	mm	
C_a	6,9	mm	
D_1	77,3	mm	
d_1	62,8	mm	
$d_{3\,max}$	69	mm	
S	24,6	mm	
W	5	mm	
m	0,99	kg	Mass
C_r	37500	N	Basic dynamic load rating, radial
C_{0r}	23200	N	Basic static load rating, radial
C_{ur}	1180	N	Fatigue limit load, radial
f_0	14,3		Calculation factor

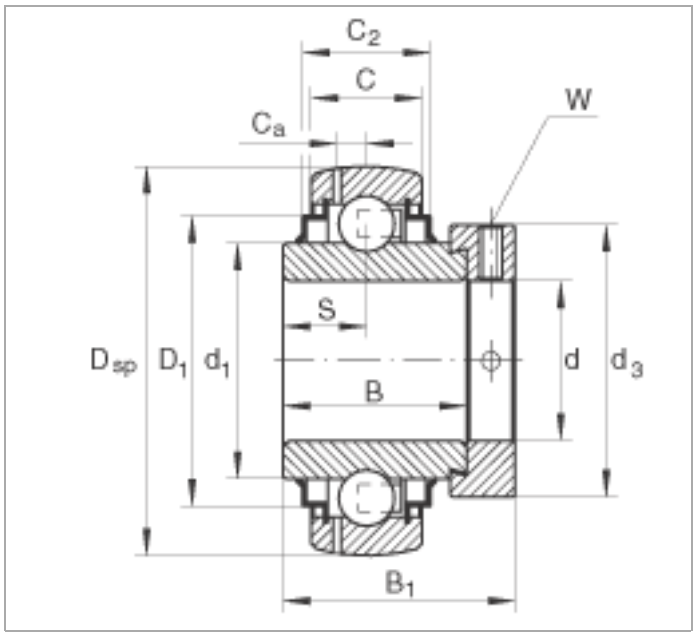
C2
C
Ca
W
S
Dsp
D1
d1
B
d
d3
B1

Unikeyic Electronics

Global Electronic Components Distributor

Click to view pricing, inventory, delivery, and lifecycle information:

INA:

GE50-DO-2RS KRE52-PP-A RAE30-XL-NPP-FA106 KB16-PP-AS KB40-PP-AS NA2200-2RSR RCJY40-XL-N GE40-UK-2RS-A NKXR30-XL TME50-XL-N IR7X10X12-XL NATV15-PP-A GE35-DO-2RS GE50-UK-2RS-A GE6-UK KH06-PP NUKR35-X-A PCJT40-XL-N IR17X22X14-IS1-OF-XL KH10PP KWVE25-B-V2-G3 NKIA59/22-XL NKIB5902-XL RME60-XL-N#N1>1 GE40-FO-2RS HK20202RSL271 KR5207-2RS LR203-X-2RSR NA4907-2RSR-XL PNA20/42-XL