Jun.1.2024 Copyright 2024 HIROSE ELECTRIC CO., LTD. All Rights Reserved.
In case of consideration for using Automotive equipment / device which demand high reliability, kindly contact our sales window correspondents.

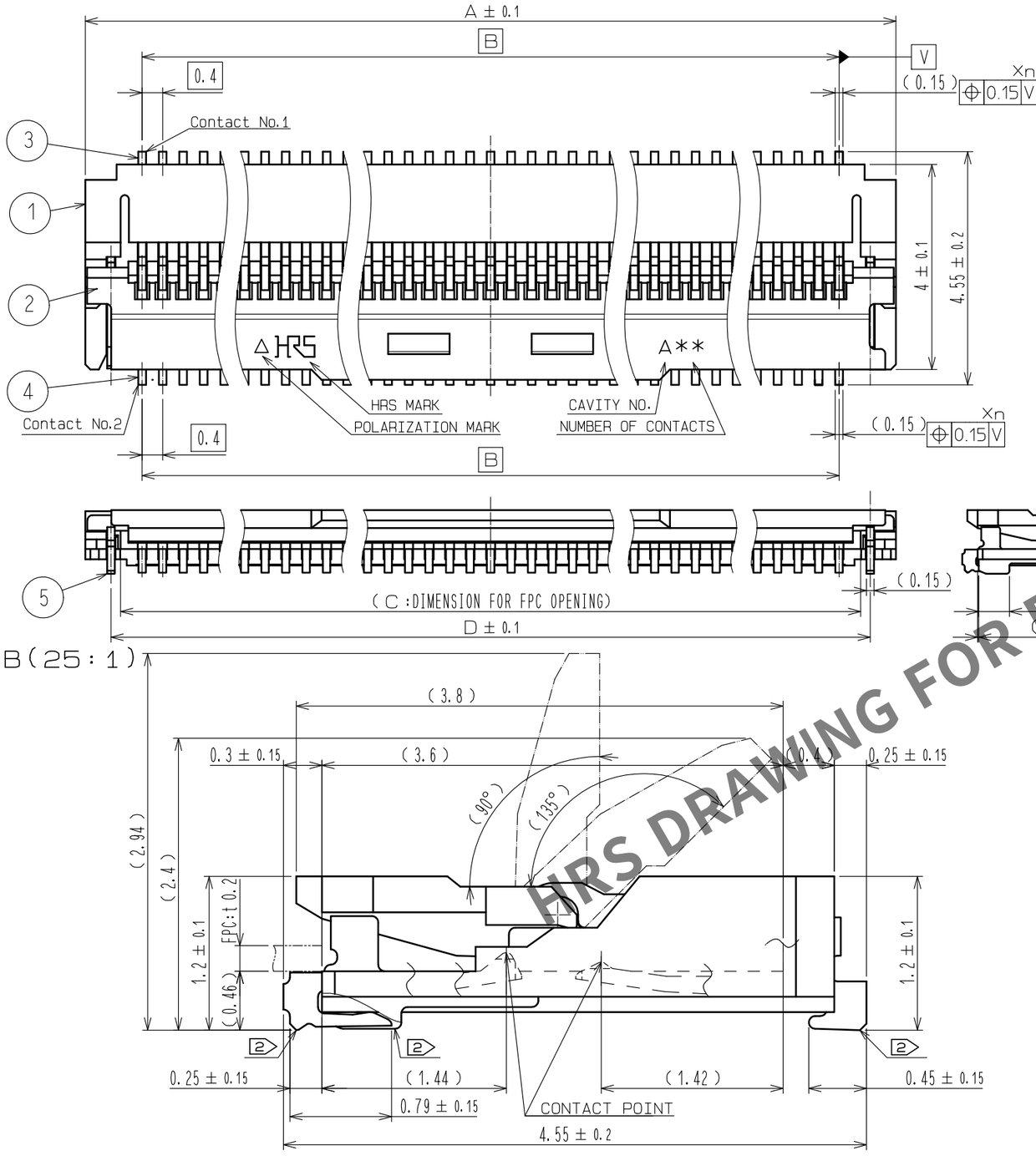

HRS DRAWING FOR REFERENCE

5 RECOMMENDED PCB MOUNTING PATTERN

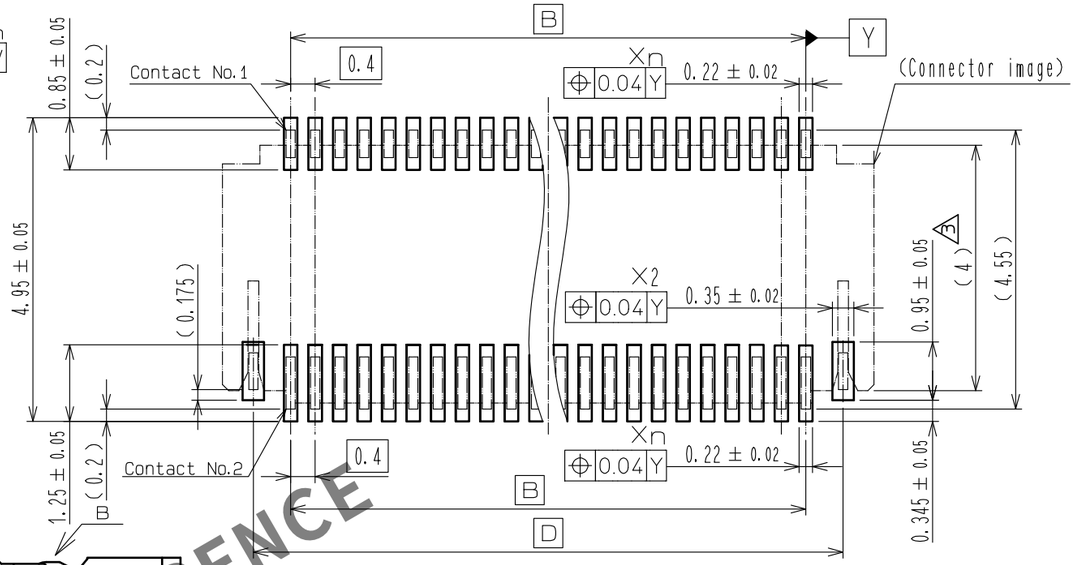

5 RECOMMENDED STENCIL PATTERN

(RECOMMENDED STENCIL THICKNESS:t=0.12)

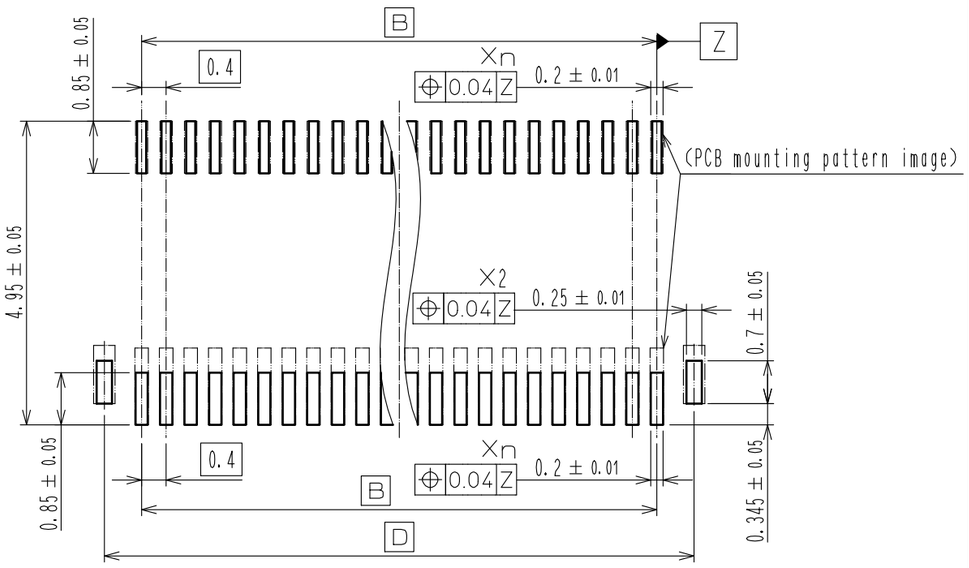

NOTE
1. THE DIMENSIONS IN PARENTHESES ARE FOR REFERENCE.
2. LEAD CO-PLANARITY INCLUDING REINFORCED METAL FITTINGS SHALL BE 0.1 MAX.
3. TO BE DELIVERED WITH TAPE AND REEL PACKAGES.
4. THE QUALITY REMAINS GOOD, EVEN WITH THE DARK SPOTS, WHICH COULD OCCASIONALLY OCCUR ON MOLDED PLASTIC.
5. RECOMMENDED LAND PATTERN DIMENSION IS AN EXAMPLE. THE DIMENSION DEPENDS ON MOUNTING REQUIREMENTS (SOLDER PASTE, PCB SIZE, AND TEMPERATURE PROFILE). THEREFORE, PLEASE CONFIRM THE MOUNTING CONDITION BEFORE USE.
6. THIS PRODUCT SATISFIES HALOGEN FREE REQUIREMENTS DEFINED AS 900 ppm MAXIMUM CHLORINE, 900 ppm MAXIMUM BROMINE, AND 1500 ppm MAXIMUM TOTAL OF CHLORINE AND BROMINE.

NO.	MATERIAL [MAKER]	FINISH , REMARKS	NO.	MATERIAL [MAKER]	FINISH , REMARKS
4	PHOSPHOR BRONZE	CONTACT AREA, LEAD: GOLD 0.05μm MIN OVER NICKEL 1μm MIN OTHER: NICKEL 1μm MIN	9	(CONNECTOR)	
			8	POLYSTYRENE	
3	PHOSPHOR BRONZE	CONTACT AREA, LEAD: GOLD 0.05μm MIN OVER NICKEL 1μm MIN OTHER: NICKEL 1μm MIN	7	POLYESTER	
			6	POLYSTYRENE	
2	PPS	BLACK UL94V-0	5	PHOSPHOR BRONZE (PLATED MATERIAL)	TIN PLATING(REFLOW FINISHED) 1μm MIN OVER COPPER 0.3μm MIN
1	LCP	BEIGE UL94V-0			

UNITS	SCALE		COUNT	DESCRIPTION OF REVISIONS	DESIGNED	CHECKED	DATE
mm	10 : 1	3	1	DIS-F-00002364	KN. KOBAYASHI	HS. SAKAMOTO	17. 05. 26

HIROSE ELECTRIC CO., LTD.

APPROVED	MO. ISHIDA	13. 11. 13
CHECKED	HS. SAKAMOTO	13. 11. 13
DESIGNED	YH. KOTANI	13. 11. 13
DRAWN	YH. KOTANI	13. 11. 13

DRAWING NO. EDC3-355229-01
PART NO. FH29DJ-*S-0.2SHW(05)
CODE NO. CL580
3 1/6

Jun.1.2024 Copyright 2024 HIROSE ELECTRIC CO., LTD. All Rights Reserved.
In case of consideration for using Automotive equipment / device which demand high reliability, kindly contact our sales window correspondents.

EMBOSSED CARRIER TAPE DIMENSION (2:1)

ϕ24mmMAX

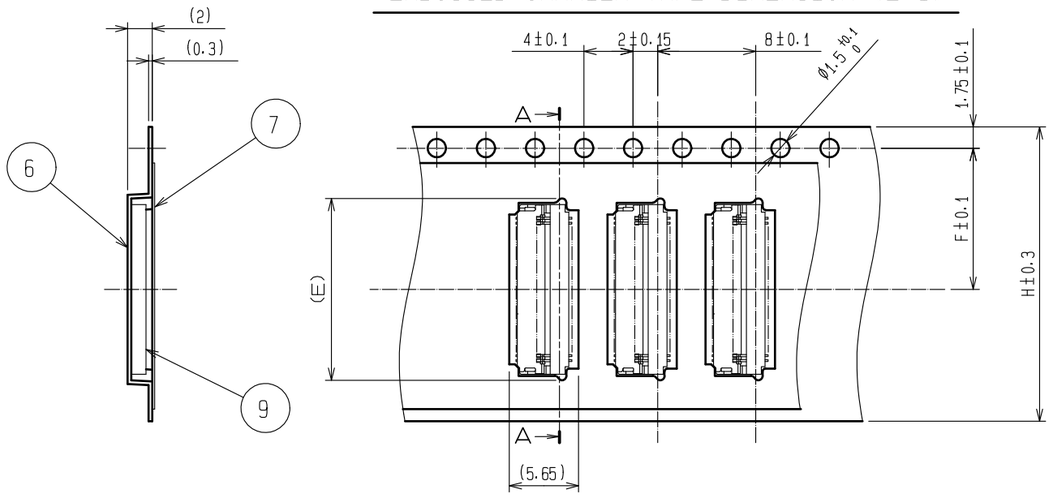

ϕ32mmMIN

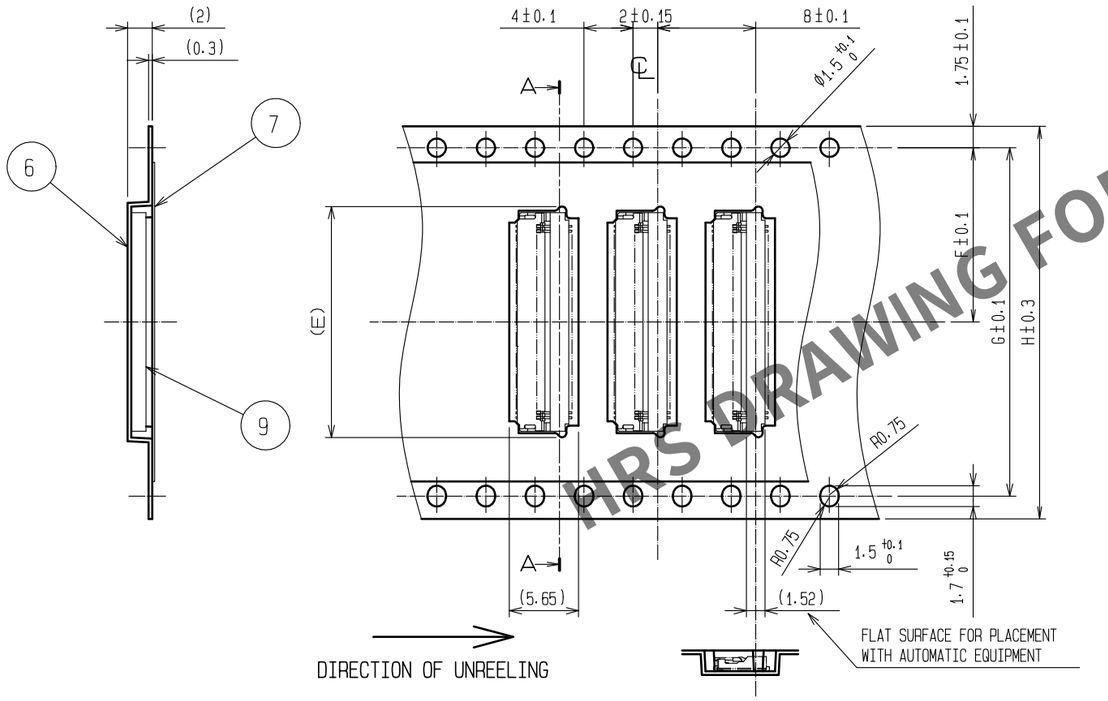

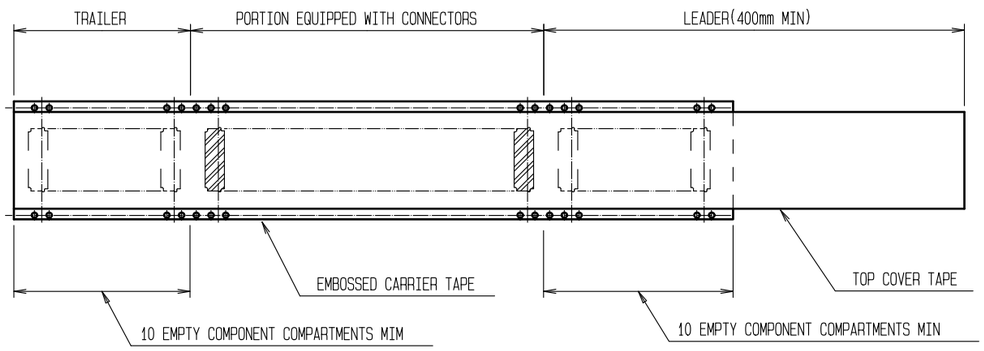

REEL DIMENSION (FREE)

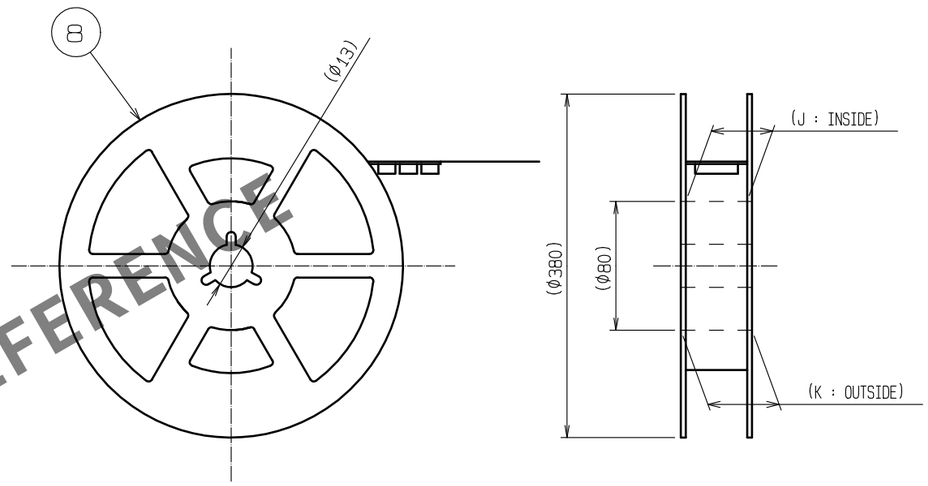

NOTE 7 PER REEL : 5000 CONNECTORS.
8 REFER TO JIS C 0806 AND IEC 60286-3
(PACKAGING OF COMPONENTS FOR AUTOMATIC HANDLING.)

HRS DRAWING FOR REFERENCE

HRS	DRAWING NO.	EDC3-355229-01
	PART NO.	FH29DJ-*S-0.2SHW(05)
	CODE NO.	CL580

Jun.1.2024 Copyright 2024 HIROSE ELECTRIC CO., LTD. All Rights Reserved.
In case of consideration for using Automotive equipment / device which demand high reliability, kindly contact our sales window correspondents.

RECOMMENDED FPC(FREE)

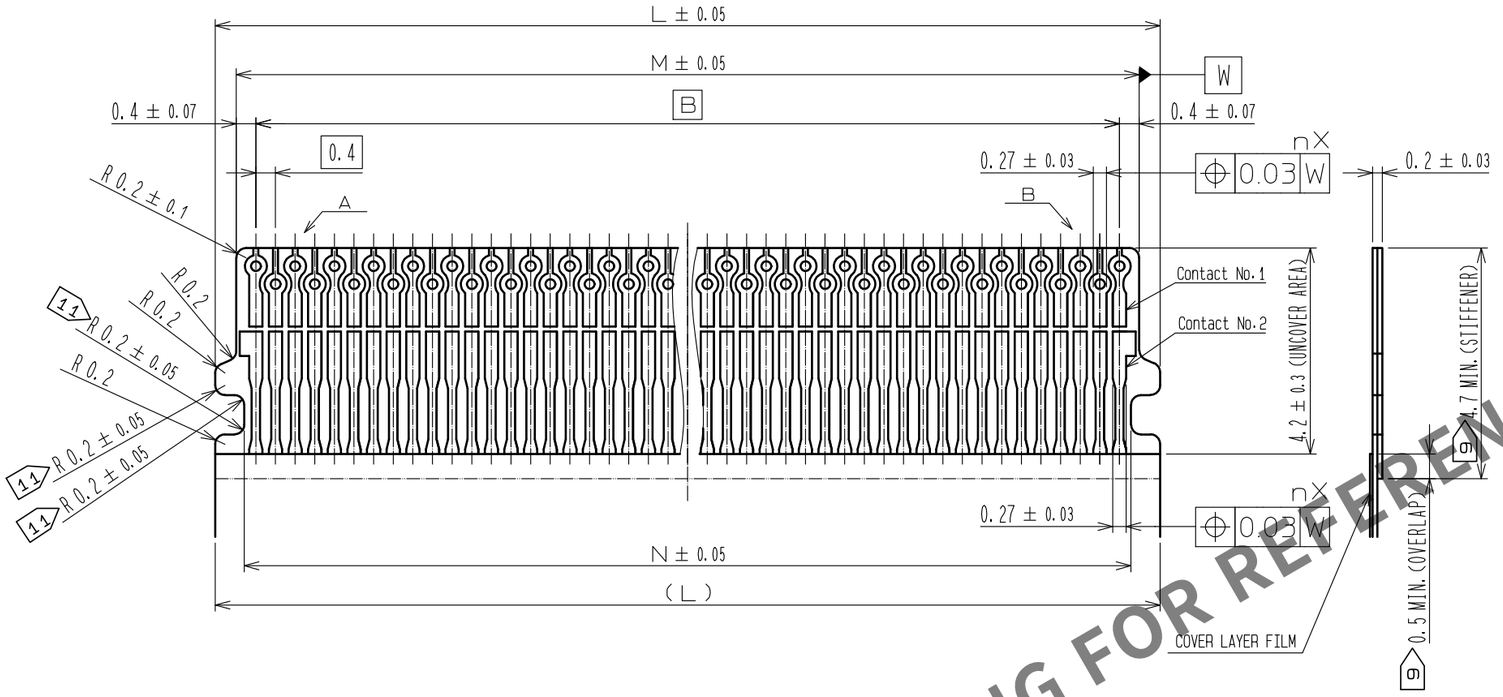

HRS DRAWING FOR REFERENCE

FPC CONFIGURATION (REFERENCE EXAMPLE)

(SCALE:FREE)

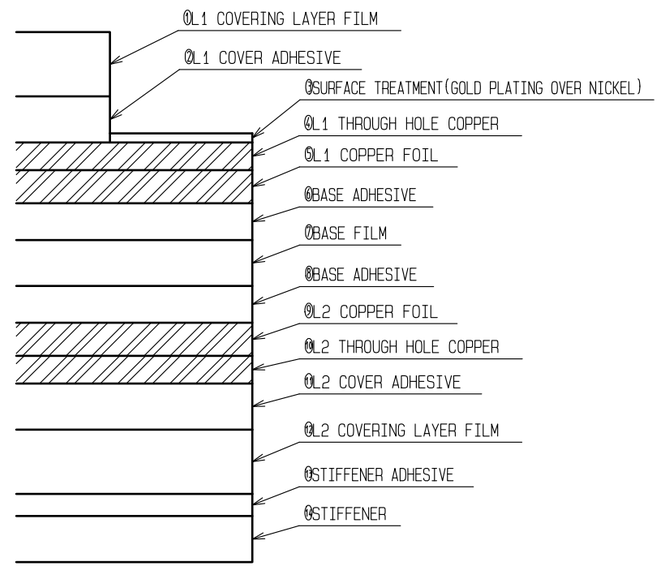

	THICKNESS(μm)		NOTES
	3 LAYERS CCL	2 LAYERS CCL	
①	25	12.5	
②	30	25	
③	3.5	3.5	GOLD PLATING OVER NICKEL
④	13	13	
⑤	18	12	
⑥	10	NO ADHESION MATERIAL	
⑦	25	25	
⑧	10	NO ADHESION MATERIAL	
⑨	18	12	
⑩	13	13	
⑪	25	20	
⑫	12.5	12.5	
⑬	30	30	POLYIMIDE +
⑭	25	75	HEAT-HARDENED ADHESIVE
TOTAL	203	216	TOTAL OF ③~⑭

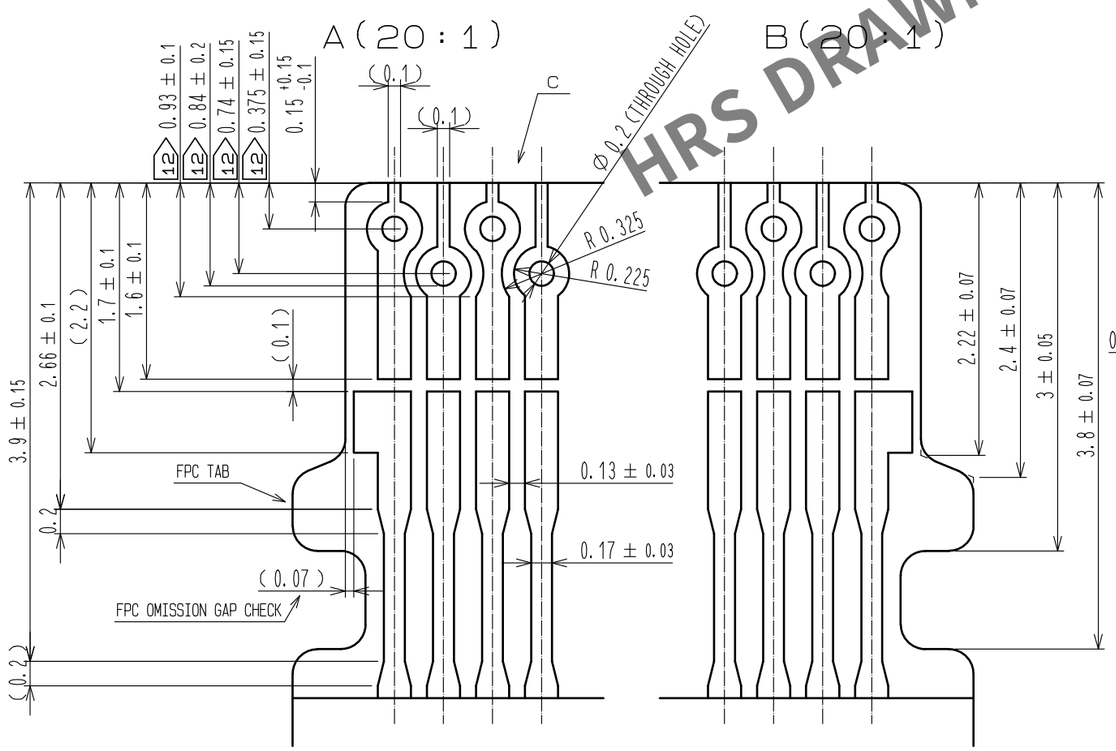

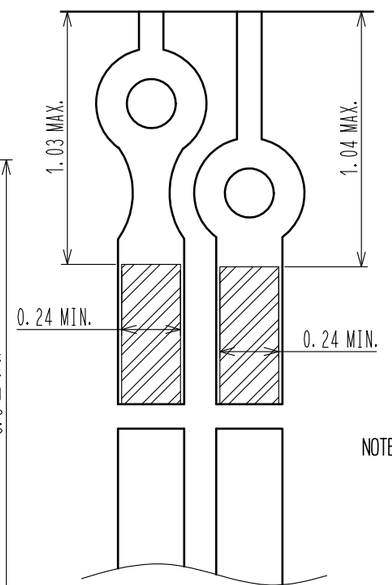

NOTE
9 THE AMOUNT OF OVERLAP MUST BE 0.5mm MINIMUM WHEN THE STIFFENER IS SHORTER THAN 4.7mm.
10 FPC THICKNESS TO BE t=0.20±0.03mm, REFERRING TO THE COMPONENT CONFIGURATION.
11 R TO BE 0.25mm MAX WHEN THE FPC MANUFACTURING TOLERANCE DOES NOT SATISFY ±0.05mm.
12 IN CASE THE DESIGNATED DIMENSIONS 0.93±0.1, 0.84±0.2, 0.74±0.15, AND 0.375±0.15 ARE UNMEASURABLE, PLEASE RESERVE THE HATCHING AREA OF MAGNIFIED DRAWING C.

DRAWING NO.	EDC3-355229-01
PART NO.	FH29DJ-*S-0.2SHW(05)
CODE NO.	CL580

Jun.1.2024 Copyright 2024 HIROSE ELECTRIC CO., LTD. All Rights Reserved.
In case of consideration for using Automotive equipment / device which demand high reliability, kindly contact our sales window correspondents.

PART NUMBER	CL NUMBER	NUMBER OF CONTACT	DIMENSION OF CONNECTOR, PCB MOUNTING PATTERN AND STENCIL					DIMENSION OF DRAWING FOR PACKING						DIMENSION OF RECOMMENDED FPC		
			A	B	C	D	n	E	F	G	H	J	K	L	M	N
FH29DJ-44S-0.2SHW(05)	CL580-0337-3-05	44	10.62	8.4	9.24	9.615	22	11.62	11.5	-	24	25.4	29.4	10.06	9.2	8.87
FH29DJ-50S-0.2SHW(05)	CL580-0338-6-05	50	11.82	9.6	10.44	10.815	25	12.82	11.5	-	24	25.4	29.4	11.26	10.4	10.07
FH29DJ-60S-0.2SHW(05)	CL580-0343-6-05	60	13.82	11.6	12.44	12.815	30	14.82	11.5	-	24	25.4	29.4	13.26	12.4	12.07
FH29DJ-70S-0.2SHW(05)	CL580-0336-0-05	70	15.82	13.6	14.44	14.815	35	16.82	11.5	-	24	25.4	29.4	15.26	14.4	14.07
FH29DJ-80S-0.2SHW(05)	CL580-0341-0-05	80	17.82	15.6	16.44	16.815	40	18.82	14.2	28.4	32	33.4	37.4	17.26	16.4	16.07
FH29DJ-90S-0.2SHW(05)	CL580-0340-8-05	90	19.82	17.6	18.44	18.815	45	20.82	20.2	40.4	44	45.4	49.4	19.26	18.4	18.07
FH29DJ-100S-0.2SHW(05)	CL580-0335-8-05	100	21.82	19.6	20.44	20.815	50	22.82	20.2	40.4	44	45.4	49.4	21.26	20.4	20.07
FH29DJ-110S-0.2SHW(05)	CL580-0339-9-05	110	23.82	21.6	22.44	22.815	55	24.72	20.2	40.4	44	45.4	49.4	23.26	22.4	22.07
FH29DJ-120S-0.2SHW(05)	CL580-0342-3-05	120	25.82	23.6	24.44	24.815	60	26.82	20.2	40.4	44	45.4	49.4	25.26	24.4	24.07

HRS DRAWING FOR REFERENCE

DRAWING NO.	EDC3-355229-01
PART NO.	FH29DJ-*S-0.2SHW(05)
CODE NO.	CL580

Jun.1.2024 Copyright 2024 HIROSE ELECTRIC CO., LTD. All Rights Reserved.
In case of consideration for using Automotive equipment / device which demand high reliability, kindly contact our sales window correspondents.

HRS DRAWING FOR REFERENCE

This connector is small and thin and requires delicate and careful handling.
Read through the instructions shown below and handle the connector properly.
Each values indicating here are for reference and may differ from standard value.

[INSTRUCTIONS FOR MOUNTING ON THE BOARD]

♦Warp of Board
Minimize warp of the board as much as possible.
Lead co-planarity including reinforced metal fittings is 0.1 mm or less.
Too much warp of the board may result in a soldering failure.

♦Flexible board design
Please make sure to put a stiffener on the backside of the flexible board.
We recommend a glass epoxy material with the thickness of 0.3mm MIN.

♦Load to Connector
Do not add 0.5N or greater external force when unreel or pick and place the connector etc, or it may get broken.
In addition, do not insert the FPC or operate the connector before mounting it.

[INSTRUCTIONS FOR PCB HANDLING AFTER MOUNTING THE CONNECTOR]

♦Load to Board
·Splitting a large board into several pieces
·Screwing the board
Avoid the handling described above so that no force is exerted on the board during the assembly process.
Otherwise, the connector may become defective.

♦Amount of Warp
The warp of a 100mm wide board should be 0.5 mm or less.
The warp of board suffers stress on connector and the connector may become defective.

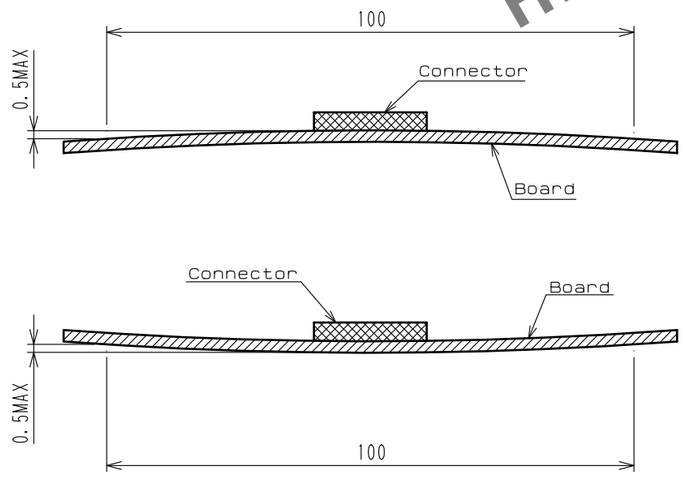

[INSTRUCTIONS ON INSERTING FPC AND CONNECTION]

♦ Use of the Actuator

1. Be very careful not to apply excessive force when releasing the actuator in the initial position (with no FPC inserted).
If you use your nail or finger as shown below, the terminals may be deformed.

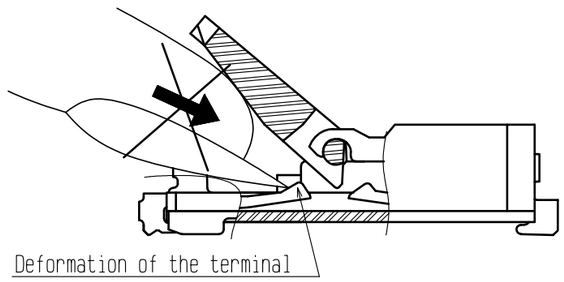

Example 1

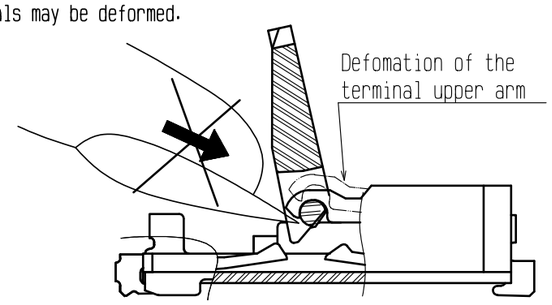

Example 2

2. The actuator rotates around the rotational axis as shown below. Please rotate the actuator.

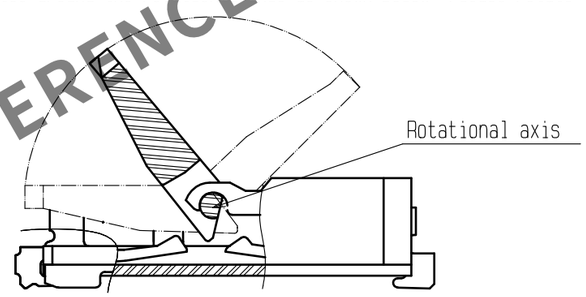

3. Please do not push downwards to the actuator with more than 0.5N force, as shown below.
Otherwise, the actuator may fall off or be damaged.

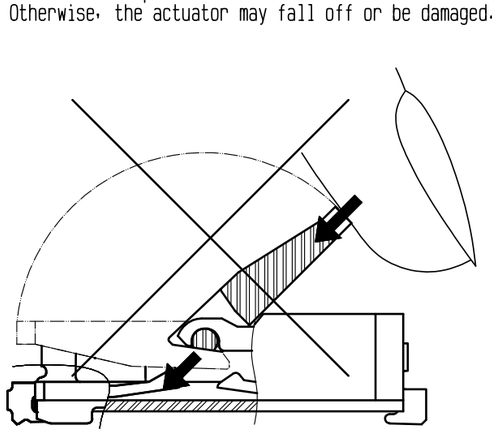

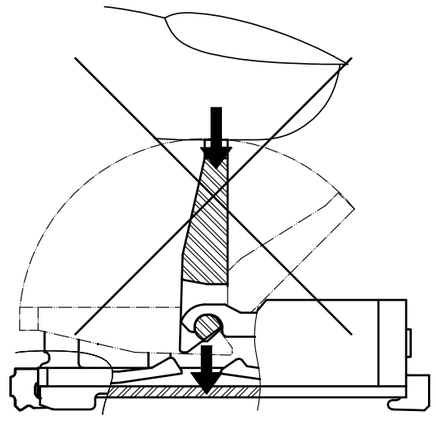

4. The actuator will not open more than 135°.
Do not apply any force backward beyond this point. Otherwise, the actuator may come off or break.

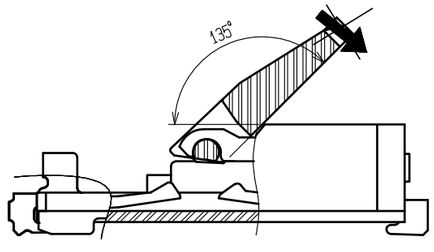

DRAWING NO.	EDC3-355229-01
PART NO.	FH29DJ-*S-0.2SHW(05)
CODE NO.	CL580

Jun.1.2024 Copyright 2024 HIROSE ELECTRIC CO., LTD. All Rights Reserved.
In case of consideration for using Automotive equipment / device which demand high reliability, kindly contact our sales window correspondents.

5. Move the actuator at approximately the center.
   (It may break if operate the edge of the actuator with FPC inserted.)
6. Do not pinch or pick the actuator to lift it as shown below. Otherwise, it may break.
   (Do not carry out any operation other than rotating the actuator as shown in 2 above.)

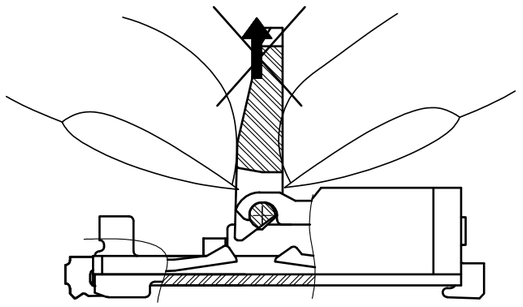

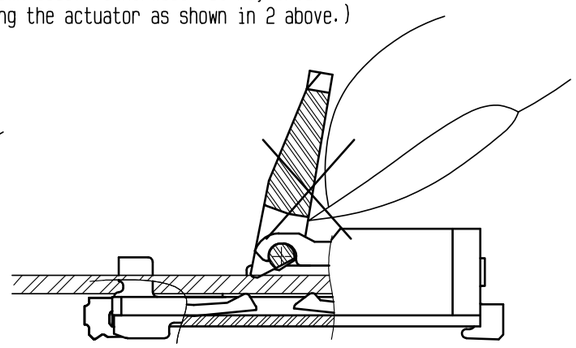

♦Direction of Contacts
This connector has contacts on the bottom. Thus, insert the FPC with the exposed conductors face down.

♦Inserting the FPC
1. Insert the FPC by about 10 degrees along the surface and at a right angle to the connector.
   Insert it properly to the very end.
   If the FPC is inserted at a slant (incorrectly),
   the conductors may short-circuit due to pitch shift or the edge of the FPC may catch in the terminals,
   resulting in deformation of the terminals.

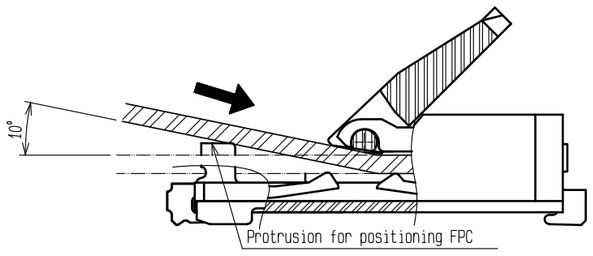

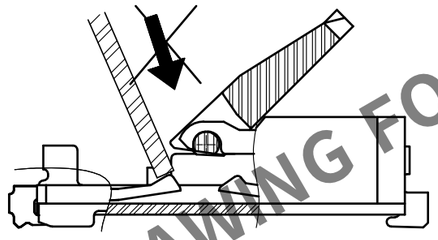

2. Do not insert the FPC diagonally from above.
   If the FPC is inserted at a slant (incorrectly) as shown below in the FPC insertion process,
   the FPC may bend and patterns may break or the FPC may not insert completely,
   resulting in improper conduction.

※Keep a sufficient FPC insertion space in the stage of the layout in order to avoid incorrect FPC insertion.
Besides, it is not difficult to insert FPC correctly all the way to the end.
Design the proper layout of parts.

※Make adjustments with the FPC manufacturer for FPC bending perfomance and wire breakage.

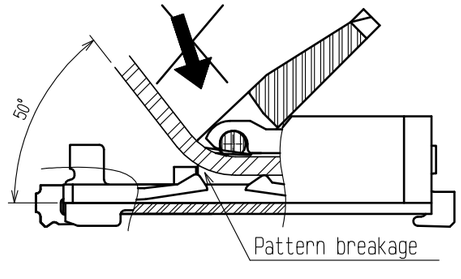

♦Checking the Locking Condition
In the locked condition, make sure that the actuator is horizontal on the board surface.
Do not apply excessive force to it near the 0° position of the actuator.
Otherwise, the terminals may be deformed. (Allowable force: 1 N or less)

HRS DRAWING FOR REFERENCE

【INSTRUCTIONS ON FPC LAYOUT AFTER CONNECTION】

♦Load to FPC
Be very careful not to apply any force to the FPC after inserting it.
Otherwise, the connector may become unlocked or the FPC may break.
Fix the FPC, in particular, when loads are applied to it continuously.
Design the FPC layout with care not to bend it sharply near the insertion opening.

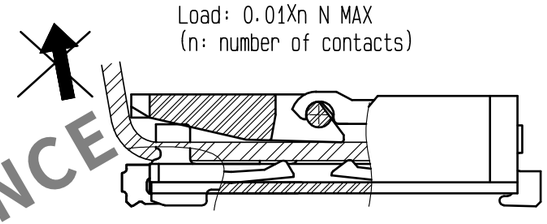

【INSTRUCTIONS ON REMOVING FPC】

♦Release the actuator at approximately the center.
(It may break if operate the edge of the actuator with FPC inserted.)
♦Release the actuator to remove the FPC.
Remove the FPC by about 10 degrees along the surface.

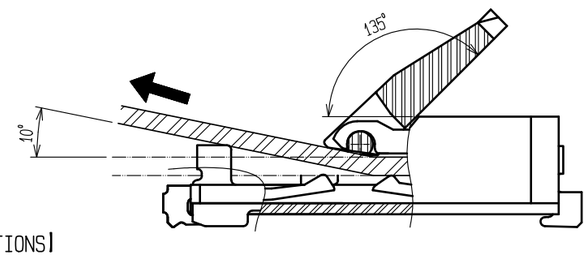

【OTHER INSTRUCTIONS】

♦Instructions on Manual Soldering
Follow the instructions shown below when soldering the connector manually during repair work, etc.
1. Do not perform reflow soldering or manual soldering with the FPC inserted into the connector.
2. Do not heat the connector excessively. Be very careful not to let the soldering iron contact
   any parts other than connector leads. Otherwise, the connector may be deformed or melt.
3. Do not use excessive solder (or flux).
   If excessive solder (or flux) is used on the terminals, solder or flux may adhere to the contacts
   or rotating parts of the actuator, resulting in poor contact or a rotation failure
   of the actuator.

HRS	DRAWING NO.	EDC3-355229-01
	PART NO.	FH29DJ-*S-0.2SHW(05)
	CODE NO.	CL580

Unikeyic Electronics

Global Electronic Components Distributor

Click to view pricing, inventory, delivery, and lifecycle information:

Hirose Electric:

DF57AH-5S-1.2C DF65-4P-1.7V(21) FX18-60S-0.8SH RM15TP-2PA(81) DF40C-50DP-0.4V(51) DF59M-2224PCF ZE05-24DP-2H ZE05H-12DP-2H FH35C-19S-0.3SHW(50) DF11-16DP-2DSA(24) DF22A-1416SCFA ZE064W-8DP-HU/R(A) DF62C-4S-2.2C FX18-80S-0.8SH DF52-4P-0.8C FH72-21S-0.3SHW RM12BRD-2PH(81) RM15TRH-10PH(81) DF17(3.0)-40DS-0.5V(57) FX8-120S-SV(22) GT8E-6S-HU HDE-CTH(10) ZH05-20DP-HU(B) BM29B0.6-4DS/2-0.35V(51) DF19A-3032SCFA(41) DF33C-4S-3.3C FH41-30S-0.5SH(05) ZE05H-4P-2V(A) DF36A-25P-SHL FH41-50S-0.5SH(28)