Dimensions: [mm]

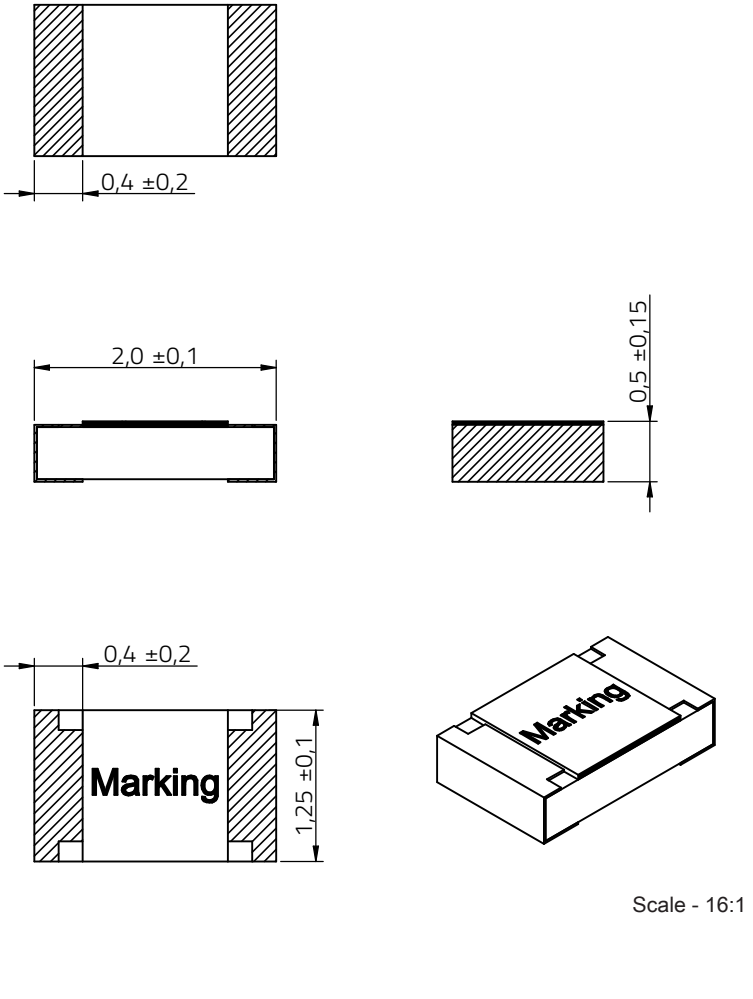

Scale - 16:1

Recommended Land Pattern: [mm]

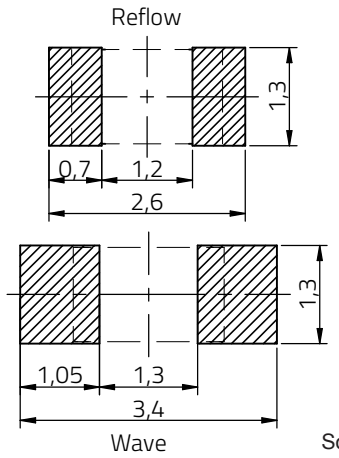

Scale - 10:1

Schematic:

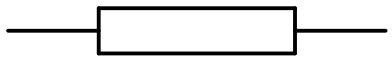

Electrical Properties:

Properties		Test conditions	Value	Unit	Tol.
Resistance	R		75	Ω	±5%
Rated Power	P_{Rated}	@ 70 °C	0.25	W	max.
Limiting Element Voltage	V_E		150	V	max.
Temperature Coefficient of Resistance (min.)	TCR		-100	ppm/ °C	
Temperature Coefficient of Resistance (max.)	TCR		100	ppm/ °C	

Rated Voltage (V) = √(Rated Power (W) x Nominal Resistance Value (Ω))
Rated voltage shall be the calculated value or limiting element voltage, whichever is lower. The limiting element voltage is the rated voltage at the critical resistance value.

General Information:

Resistance Element Type	RuO_2
Resistor Technology	Thick Film Resistors
Operating Temperature	-55 up to +155 °C
Storage Conditions (in original packaging)	5 °C up to + 35 °C; 25 % up to 75 % RH
Test conditions of electrical properties: +20 °C, 35 % RH if not specified differently	
Sulfur resistant: Tested according to ASTM-B-809	
FIT according to separate documentation	
Component conform to REACh and RoHS requirements and standards	

RoHS COMPLIANT
REACh COMPLIANT

WÜRTH ELEKTRONIK MORE THAN YOU EXPECT

Würth Elektronik eiSos GmbH & Co. KG
EMC & Inductive Solutions
Max-Eyth-Str. 1
74638 Waldenburg
Germany
Tel. +49 (0) 79 42 945 - 0
www.we-online.com
eiSos@we-online.com

CHECKED	REVISION	DATE (YYYY-MM-DD)	GENERAL TOLERANCE	PROJECTION METHOD
FPu	001.000	2023-09-14	DIN ISO 2768-1m	

DESCRIPTION: **WRIS-RSKS Thick Film - Anti-Sulfur General Purpose**

TECHNICAL REFERENCE: KS08050750J104KAATP0000

ORDER CODE: **560112120005**

SIZE/TYPE	BUSINESS UNIT	STATUS	PAGE
0805	eiSos	Valid	1/9

This electronic component has been designed and developed for usage in general electronic equipment only. This product is not authorized for use in equipment where a higher safety standard and reliability standard is especially required or where a failure of the product is reasonably expected to cause severe personal injury or death, unless the parties have executed an agreement specifically governing such use. Moreover Würth Elektronik eiSos GmbH & Co KG products are neither designed nor intended for use in areas such as military, aerospace, aviation, nuclear control, submarine, transportation, transportation signal, disaster prevention, medical, public information network etc.. Würth Elektronik eiSos GmbH & Co KG must be informed about the intent of such usage before the design-in stage. In addition, sufficient reliability evaluation checks for safety must be performed on every electronic component which is used in electrical circuits that require high safety and reliability functions or performance.

Mechanical Properties:

Properties	Definition	
Termination	Plating	Ni/Sn
Adhesive Strenght of Termination		60 ± 1 sec; 17.6 N
Vibration Resistance		5 g for 20 minutes, 12 cycles each of 3 orientations @ 10 - 2000 - 10 Hz
Resistance to Solder Heat	Solder Temperature	260 °C ± 5 °C
	Dipping Time	10 sec.
	Specific	Refer to Soldering Profile

Certification:

RoHS Approval	Compliant [2011/65/EU&2015/863]
REACh Approval	Conform or declared [(EC)1907/2006]

Derating Curve:

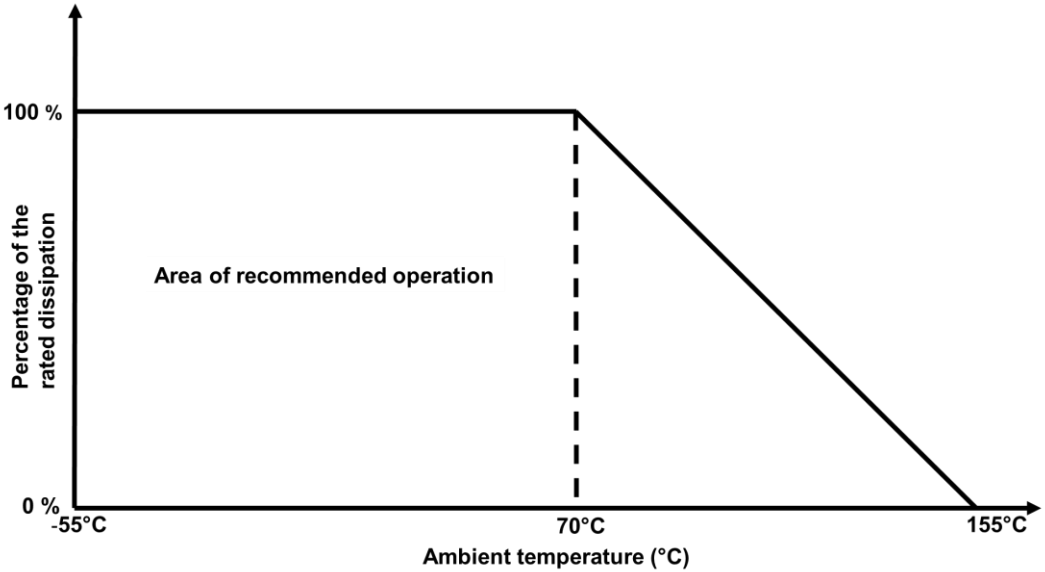

RoHS COMPLIANT
REACh COMPLIANT

WÜRTH ELEKTRONIK MORE THAN YOU EXPECT

Würth Elektronik eiSos GmbH & Co. KG
EMC & Inductive Solutions
Max-Eyth-Str. 1
74638 Waldenburg
Germany
Tel. +49 (0) 79 42 945 - 0
www.we-online.com
eiSos@we-online.com

CHECKED	REVISION	DATE (YYYY-MM-DD)	GENERAL TOLERANCE	PROJECTION METHOD
FPu	001.000	2023-09-14	DIN ISO 2768-1m	

DESCRIPTION
WRIS-RSKS Thick Film - Anti-Sulfur General Purpose

TECHNICAL REFERENCE
KS08050750J104KAATP0000

ORDER CODE
560112120005

SIZE/TYPE	BUSINESS UNIT	STATUS	PAGE
0805	eiSos	Valid	2/9

This electronic component has been designed and developed for usage in general electronic equipment only. This product is not authorized for use in equipment where a higher safety standard and reliability standard is especially required or where a failure of the product is reasonably expected to cause severe personal injury or death, unless the parties have executed an agreement specifically governing such use. Moreover Würth Elektronik eiSos GmbH & Co KG products are neither designed nor intended for use in areas such as military, aerospace, aviation, nuclear control, submarine, transportation, transportation signal, disaster prevention, medical, public information network etc.. Würth Elektronik eiSos GmbH & Co KG must be informed about the intent of such usage before the design-in stage. In addition, sufficient reliability evaluation checks for safety must be performed on every electronic component which is used in electrical circuits that require high safety and reliability functions or performance.

Packaging Specification - Tape: [mm]

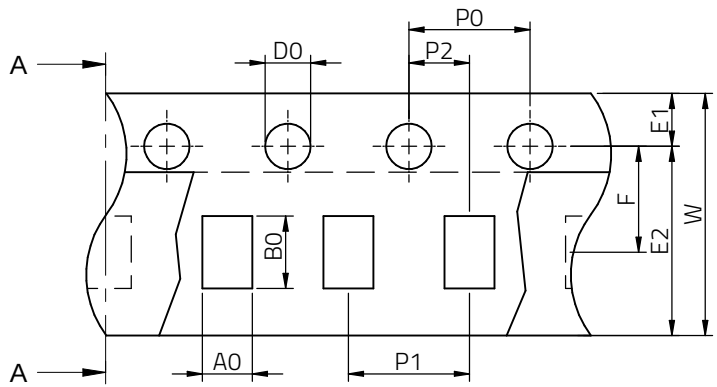

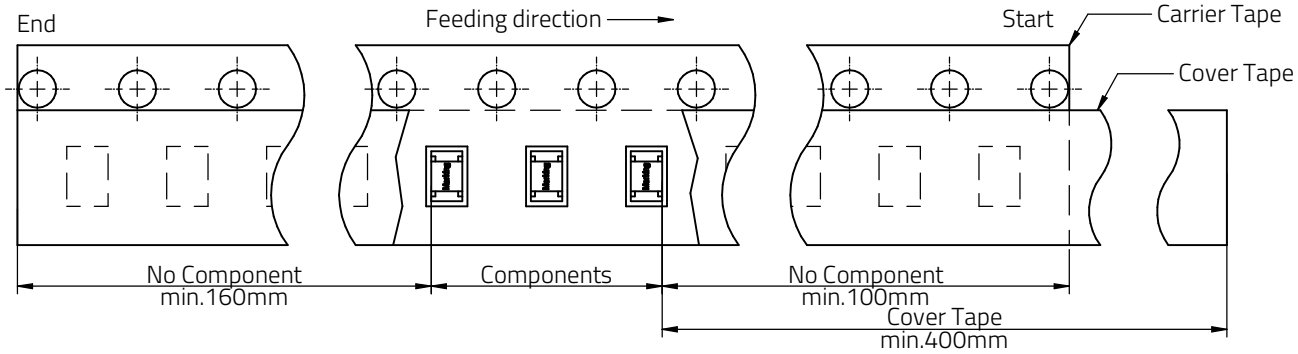

Packaging is referred to the international standard **IEC 60286-3:2019**

	Tape Type	A0 (mm)	B0 (mm)	W (mm)	T (mm)	T1 (mm)	P0 (mm)	P1 (mm)	P2 (mm)	D0 (mm)	E1 (mm)	E2 (mm)	F (mm)	Material	Qty. (pcs.)
Tolerance		typ.	typ.	±0,3	max.	ref.	±0,1	±0,1	±0,05	+0,1 / -0,0	±0,1	min.	±0,2		
Value	1a	1,65	2,40	8,00	1,00	0,10	4,00	4,00	2,00	1,50	1,75	6,25	3,50	Paper	5000

Packaging Specification - Reel: [mm]

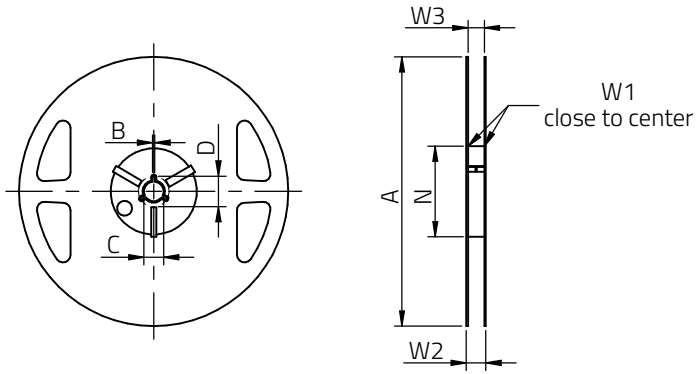

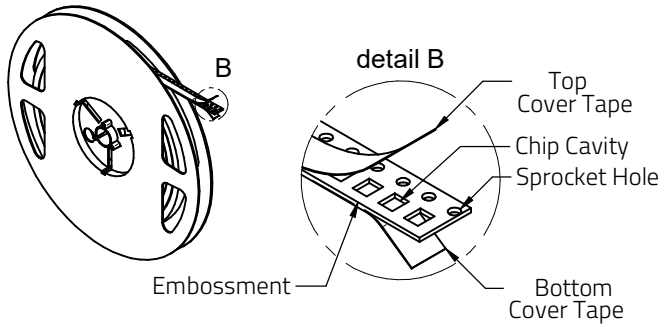

Packaging is referred to the international standard **IEC 60286-3:2019**

	A (mm)	B (mm)	C (mm)	D (mm)	N (mm)	W1 (mm)	W2 (mm)	W3 (mm)	W3 (mm)	Material
Tolerance	± 2,0	min.	min.	min.	typ.	+1,5	max.	min.	max.	
Value	178	1.5	12.8	20.2	60	8.4	14.4	7.9	10.9	Polystyrene

Packaging Specification - Force: [mm]

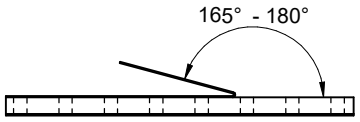

		Pull-off force
Tape width	8 mm	0,1 N - 0,7 N

RoHS COMPLIANT
REACh COMPLIANT

WÜRTH ELEKTRONIK MORE THAN YOU EXPECT

Würth Elektronik eiSos GmbH & Co. KG
EMC & Inductive Solutions
Max-Eyth-Str. 1
74638 Waldenburg
Germany
Tel. +49 (0) 79 42 945 - 0
www.we-online.com
eiSos@we-online.com

CHECKED	REVISION	DATE (YYYY-MM-DD)	GENERAL TOLERANCE	PROJECTION METHOD
FPu	001.000	2023-09-14	DIN ISO 2768-1m	

DESCRIPTION: **WRIS-RSKS Thick Film - Anti-Sulfur General Purpose**

TECHNICAL REFERENCE: KS08050750J104KAATP0000

ORDER CODE: **560112120005**

SIZE/TYPE	BUSINESS UNIT	STATUS	PAGE
0805	eiSos	Valid	3/9

This electronic component has been designed and developed for usage in general electronic equipment only. This product is not authorized for use in equipment where a higher safety standard and reliability standard is especially required or where a failure of the product is reasonably expected to cause severe personal injury or death, unless the parties have executed an agreement specifically governing such use. Moreover Würth Elektronik eiSos GmbH & Co KG products are neither designed nor intended for use in areas such as military, aerospace, aviation, nuclear control, submarine, transportation, transportation signal, disaster prevention, medical, public information network etc.. Würth Elektronik eiSos GmbH & Co KG must be informed about the intent of such usage before the design-in stage. In addition, sufficient reliability evaluation checks for safety must be performed on every electronic component which is used in electrical circuits that require high safety and reliability functions or performance.

Packaging Specification - Reel in Carton: [mm]

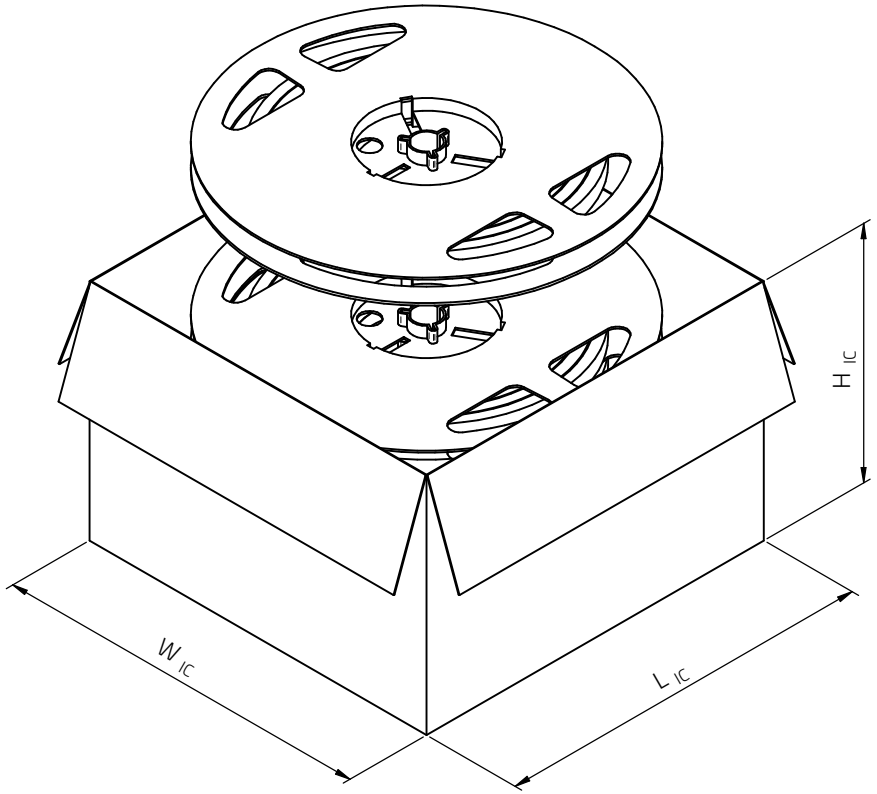

Packaging is referred to the international standard **IEC 60286-3:2019**

	L_{IC} (mm)	W_{IC} (mm)	H_{IC} (mm)	No. of Reel (pcs.)	Qty. (pcs.)	Material
Tolerance	typ.	typ.	typ.			
Value	180,00	180,00	120,00	10	50000	Paper

Packaging Specification - Outer Carton: [mm]

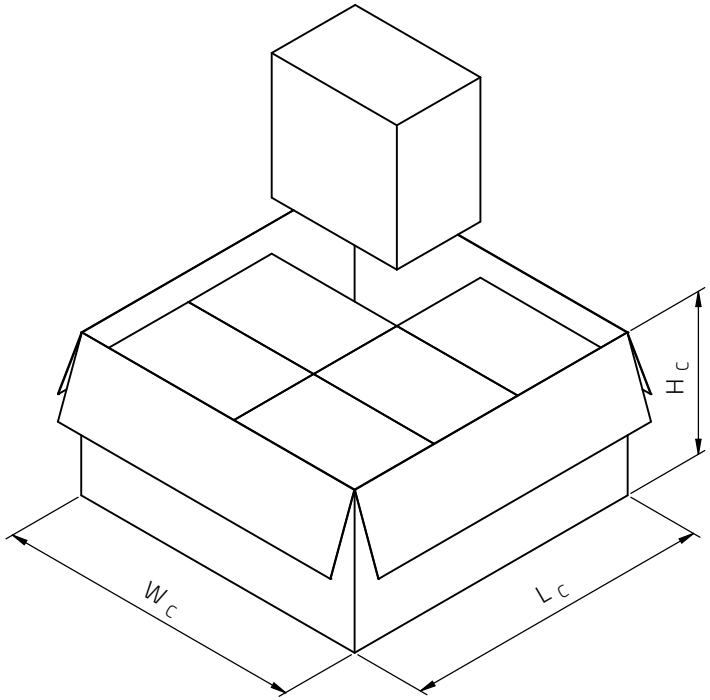

Packaging is referred to the international standard **IEC 60286-3:2019**

	L_C (mm)	W_C (mm)	H_C (mm)	No. of Inner Carton (pcs.)	Qty. (pcs.)	Material
Tolerance	typ.	typ.	typ.			
Value	393,00	393,00	203,00	6	300000	Paper

RoHS COMPLIANT
REACh COMPLIANT

WÜRTH ELEKTRONIK
MORE THAN YOU EXPECT

Würth Elektronik eiSos GmbH & Co. KG
EMC & Inductive Solutions
Max-Eyth-Str. 1
74638 Waldenburg
Germany
Tel. +49 (0) 79 42 945 - 0
www.we-online.com
eiSos@we-online.com

CHECKED	REVISION	DATE (YYYY-MM-DD)	GENERAL TOLERANCE	PROJECTION METHOD
FPu	001.000	2023-09-14	DIN ISO 2768-1m	

DESCRIPTION
WRIS-RSKS Thick Film - Anti-Sulfur General Purpose

TECHNICAL REFERENCE
KS08050750J104KAATP0000

ORDER CODE
560112120005

SIZE/TYPE	BUSINESS UNIT	STATUS	PAGE
0805	eiSos	Valid	4/9

This electronic component has been designed and developed for usage in general electronic equipment only. This product is not authorized for use in equipment where a higher safety standard and reliability standard is especially required or where a failure of the product is reasonably expected to cause severe personal injury or death, unless the parties have executed an agreement specifically governing such use. Moreover Würth Elektronik eiSos GmbH & Co KG products are neither designed nor intended for use in areas such as military, aerospace, aviation, nuclear control, submarine, transportation, transportation signal, disaster prevention, medical, public information network etc.. Würth Elektronik eiSos GmbH & Co KG must be informed about the intent of such usage before the design-in stage. In addition, sufficient reliability evaluation checks for safety must be performed on every electronic component which is used in electrical circuits that require high safety and reliability functions or performance.

Classification Reflow Profile for SMT components:

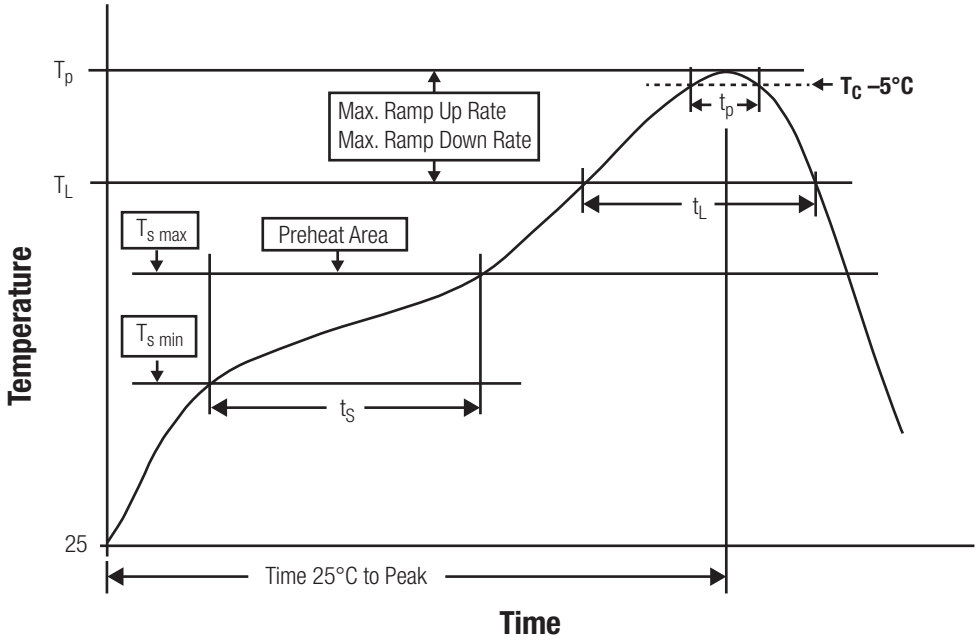

Classification Reflow Soldering Profile:

Profile Feature		Value
Preheat Temperature Min	$T_{s\ min}$	150 °C
Preheat Temperature Max	$T_{s\ max}$	200 °C
Preheat Time t_s from $T_{s\ min}$ to $T_{s\ max}$	t_s	60 - 120 seconds
Ramp-up Rate (T_L to T_P)		3 °C/ second max.
Liquidous Temperature	T_L	217 °C
Time t_L maintained above T_L	t_L	60 - 150 seconds
Peak package body temperature	T_p	$T_p \leq T_c$, see Table below
Time within 5°C of actual peak temperature	t_p	20 - 30 seconds
Ramp-down Rate (T_P to T_L)		6 °C/ second max.
Time 25°C to peak temperature		8 minutes max.

refer to IPC/ JEDEC J-STD-020E

Package Classification Reflow Temperature (T_C):

Properties	Volume mm³ <350	Volume mm³ 350-2000	Volume mm³ >2000
PB-Free Assembly I Package Thickness < 1.6 mm	260 °C	260 °C	260 °C
PB-Free Assembly I Package Thickness 1.6 mm - 2.5 mm	260 °C	250 °C	245 °C
PB-Free Assembly I Package Thickness > 2.5 mm	250 °C	245 °C	245 °C

refer to IPC/ JEDEC J-STD-020E

RoHS COMPLIANT REACh COMPLIANT

WÜRTH ELEKTRONIK MORE THAN YOU EXPECT

Würth Elektronik eiSos GmbH & Co. KG
EMC & Inductive Solutions
Max-Eyth-Str. 1
74638 Waldenburg
Germany
Tel. +49 (0) 79 42 945 - 0
www.we-online.com
eiSos@we-online.com

CHECKED	REVISION	DATE (YYYY-MM-DD)	GENERAL TOLERANCE	PROJECTION METHOD
FPu	001.000	2023-09-14	DIN ISO 2768-1m	

DESCRIPTION: **WRIS-RSKS Thick Film - Anti-Sulfur General Purpose**

TECHNICAL REFERENCE: KS08050750J104KAATP0000

ORDER CODE: **560112120005**

SIZE/TYPE	BUSINESS UNIT	STATUS	PAGE
0805	eiSos	Valid	5/9

This electronic component has been designed and developed for usage in general electronic equipment only. This product is not authorized for use in equipment where a higher safety standard and reliability standard is especially required or where a failure of the product is reasonably expected to cause severe personal injury or death, unless the parties have executed an agreement specifically governing such use. Moreover Würth Elektronik eiSos GmbH & Co KG products are neither designed nor intended for use in areas such as military, aerospace, aviation, nuclear control, submarine, transportation, transportation signal, disaster prevention, medical, public information network etc.. Würth Elektronik eiSos GmbH & Co KG must be informed about the intent of such usage before the design-in stage. In addition, sufficient reliability evaluation checks for safety must be performed on every electronic component which is used in electrical circuits that require high safety and reliability functions or performance.

Further information

Component Libraries:

- 3D_WRIS-RSKS_0805
- Altium_WRIS-RSKS (23a)
- Cadence_WRIS-RSKS (23a)
- Eagle_WRIS-RSKS (23a)
- IGS_WRIS-RSKS_0805
- STP_WRIS-RSKS_0805

Free Sample Order:

Order free samples of this article directly here!

REDEXPERT:

Find the right resistor with REDEXPERT

RoHS COMPLIANT
REACh COMPLIANT

WÜRTH ELEKTRONIK MORE THAN YOU EXPECT

Würth Elektronik eiSos GmbH & Co. KG
EMC & Inductive Solutions
Max-Eyth-Str. 1
74638 Waldenburg
Germany
Tel. +49 (0) 79 42 945 - 0
www.we-online.com
eiSos@we-online.com

CHECKED	REVISION	DATE (YYYY-MM-DD)	GENERAL TOLERANCE	PROJECTION METHOD
FPu	001.000	2023-09-14	DIN ISO 2768-1m	

DESCRIPTION: **WRIS-RSKS Thick Film - Anti-Sulfur General Purpose**

TECHNICAL REFERENCE: KS08050750J104KAATP0000

ORDER CODE: **560112120005**

SIZE/TYPE	BUSINESS UNIT	STATUS	PAGE
0805	eiSos	Valid	6/9

This electronic component has been designed and developed for usage in general electronic equipment only. This product is not authorized for use in equipment where a higher safety standard and reliability standard is especially required or where a failure of the product is reasonably expected to cause severe personal injury or death, unless the parties have executed an agreement specifically governing such use. Moreover Würth Elektronik eiSos GmbH & Co KG products are neither designed nor intended for use in areas such as military, aerospace, aviation, nuclear control, submarine, transportation, transportation signal, disaster prevention, medical, public information network etc.. Würth Elektronik eiSos GmbH & Co KG must be informed about the intent of such usage before the design-in stage. In addition, sufficient reliability evaluation checks for safety must be performed on every electronic component which is used in electrical circuits that require high safety and reliability functions or performance.

Cautions and Warnings:

The following conditions apply to all goods within the product series of Resistors of Würth Elektronik eiSos GmbH & Co. KG:

General:

- This electronic component is designed and manufactured for use in general electronic equipment.
- Würth Elektronik must be asked for a written approval (following the PPAP level procedure) before incorporating the components into any equipment in the field such as military, aerospace, aviation, nuclear control, submarine, transportation (automotive control, train control, ship control), transportation signal, disaster prevention, medical, public information network etc. where higher safety and reliability are especially required and/or if there is the possibility of direct damage or human injury.
- Electronic components that will be used in safety-critical or high-reliability applications, should be pre-evaluated by the customer.
- Direct mechanical impact to the product shall be prevented as material of the body, pins or termination could flake or in the worst case it could break.
- Würth Elektronik products are qualified according to international standards, which are listed in each product reliability report. Würth Elektronik does not warrant any customer qualified product characteristic, beyond Würth Elektronik specifications, for its validity and sustainability over time.
- The customer is responsible for the functionality of his or her own products. All technical specifications for standard products also apply to customer specific products.
- The component is designed and manufactured to be used within the datasheet specified values. If the usage and operation conditions specified in the datasheet are not met, the body, pins or termination may be damaged or dissolved.
- Do not apply any kind of flexural or compressive force onto soldered or unsoldered component.
- The resistance tolerance as specified within the datasheet is only valid on the date of delivery and according to the specified measurement criteria.

Product specific:

Storage conditions:

- A storage of Würth Elektronik products for longer than 12 months is not recommended. Within other effects, the terminals may suffer degradation, resulting in bad solderability. Therefore, all products shall be used within the period of 12 months based on the day of shipment.
- Do not expose the components into direct sunlight.
- The storage conditions in the original packaging are defined according to DIN EN 61760-2.
- The environment in which the resistors are operated and stored must have atmospheric characteristics and be free of dew condensation and toxic gases (e.g. chlorine, ammonia, sulfur, hydrogen sulphide and hydrogen sulfate).
- Do not expose the resistor to environments with hazardous gas, ozone, ultraviolet rays or any kind of radiation. Avoid any contact of the resistor with direct sunshine, saltwater, spray of water or types of oil during storage.
- The storage conditions stated in the original packaging apply to the storage time and not to the transportation time of the components.

Packaging:

- The packaging specifications apply only to purchase orders comprising whole packaging units. If the ordered quantity exceeds or is lower than the specified packaging unit, packaging in accordance with the packaging specifications cannot be ensured.

Operating climatic conditions:

- The resistor shall not be operated outside the operating temperature range, which is stated in the datasheet of the specific resistor.
- The specified resistance tolerance is only valid at the date of delivery.
- Do not use the resistors under high humidity, high temperature or under high or low atmospheric pressure which may affect the resistors reliability.
- Surface temperature including self-heating must be kept below the maximum operating temperature.
- Avoid any water or heavy dust on the resistor's surface, which may cause electrical leakage, damage, overheating or corrosion.

Operating load conditions:

- Do not use the resistor with any higher rated dissipation, rated current or rated voltage than specified.
- If overload is applied to a resistor, it may emit flame, fire or smoke.
- Violation of the technical product specifications such as exceeding the specified dissipation will void the warranty.
- When the resistors are operated in ambient temperature above the rated temperature, the power rating must be derated according to the derating curve.
- Verification and confirmation of performance characteristics of the product, after on-board mounting, is recommended.

Design of the PCB:

- The chip resistor shall be located to minimize any possible mechanical stress from deflection or board wrap.
- It is recommended to position the chip resistor in parallel to slits and perforations and as far away as possible from slits, perforations, separation points, screw holes, frames and edges of the PCB to avoid mechanical stress.
- Determine the shape and size of the solder pads to have proper amount of solder on the terminations as the amount of solder at the terminations has a direct effect on the resistance value and reliability of the resistor. The resistance value after soldering may change depending on the size of the land pattern, wiring pattern or solder amount. Make sure the effect of the change of the resistance value before using it.
- lindividual land patterns for each termination are provided in the datasheet.
- While thermal cycling, cracking of the solder fillet may occur as the coefficients of thermal expansion between the board and the component may be different. Pad size, amount of solder, and amount of heat radiating from the PCB must be designed carefully.
- The parasitic inductance of the chip resistor and the wiring pattern may influence current detection under high frequency usage, make sure the effect before you use it.
- The PCB design (e.g. land pattern design and grounding planes) must be evaluated for each individual circuit to achieve the optimal soldering results.

RoHS COMPLIANT
REACh COMPLIANT

WÜRTH ELEKTRONIK
MORE THAN YOU EXPECT

Würth Elektronik eiSos GmbH & Co. KG
EMC & Inductive Solutions
Max-Eyth-Str. 1
74638 Waldenburg
Germany
Tel. +49 (0) 79 42 945 - 0
www.we-online.com
eiSos@we-online.com

CHECKED	REVISION	DATE (YYYY-MM-DD)	GENERAL TOLERANCE	PROJECTION METHOD
FPu	001.000	2023-09-14	DIN ISO 2768-1m	

DESCRIPTION: **WRIS-RSKS Thick Film - Anti-Sulfur General Purpose**

TECHNICAL REFERENCE: KS08050750J104KAATP0000

ORDER CODE: **560112120005**

SIZE/TYPE	BUSINESS UNIT	STATUS	PAGE
0805	eiSos	Valid	7/9

This electronic component has been designed and developed for usage in general electronic equipment only. This product is not authorized for use in equipment where a higher safety standard and reliability standard is especially required or where a failure of the product is reasonably expected to cause severe personal injury or death, unless the parties have executed an agreement specifically governing such use. Moreover Würth Elektronik eiSos GmbH & Co KG products are neither designed nor intended for use in areas such as military, aerospace, aviation, nuclear control, submarine, transportation, transportation signal, disaster prevention, medical, public information network etc.. Würth Elektronik eiSos GmbH & Co KG must be informed about the intent of such usage before the design-in stage. In addition, sufficient reliability evaluation checks for safety must be performed on every electronic component which is used in electrical circuits that require high safety and reliability functions or performance.

Mounting:

- Tthe bottom dead center of the mounting head must be adjusted, so that it does not press on the PCB surface to avoid any punctual pressure on component at pick & place.
- When a highly active halogenous (chlorine,bromine, etc.) flux is used, the residues of flux may negatively affect the resistor's performance and reliability.
- The reflow soldering method shall be used.
- Be careful when picking up the resistors with tweezers, as the overcoat and/ or the body can chip-off.
- Ensure sufficient close up dimension, preventive maintenance and replacement of the centering jaw to avoid a crack when it is worn out.
- The resistor temperature could exceed 155°C depending on the wiring pattern, heat dissipation from surrounding, etc., which is not necessarily relevant related to the rated dissipation. It must be ensured in advance that the heat dissipation of the resistor does not damage the PCB and any surrounding components.
- Support from the bottom side of the PCB by a support pin is required to minimize the impact energy from the mounting head.
- In case of manual soldering, the soldering tip shall not touch the product.

Adhesive:

- The adhesive should have a sufficient coating and viscosity and should harden rapidly.
- The adhesive should be strong enough to hold parts on the board during the mounting and solder process and should have sufficient strength at high temperatures.
- The adhesive should have corrosion resistance, excellent insulation characteristics and no emission of toxic gasses or any effect on the human body.
- Do not use too much adhesive to avoid pollution of the soldering pads.

Anti-pulse Characteristics:

- If transient overloads such as power pulse or voltage / current surges are applied to resistor products, their performance and reliability may be degraded.
- Pay attention to discharges between terminations (arc-over) when high voltages are applied.

Soldering:

- The solder profile must comply with the Würth Elektronik technical soldering specification. All other profiles will void the warranty.
- All other soldering methods are at the customer's own risk.
- Strong forces which may affect the coplanarity of the component's electrical connection with the PCB (i.e. pins), can damage the part, resulting in avoid of the warranty.
- Customer needs to ensure that the applied solder paste, the paste thickness and solder conditions are applicable to guarantee a sufficient solder result according to the relevant criteria of IPC-A-610.
- Excessive amount of solder may lead to higher tensile force and chip cracking. Insufficient amount of solder may detach the resistor due to defective contacts.
- Do not use excessive nor insufficient flux.
- Provide enough washing when water-soluble flux is used.
- A maximum of two reflow cycles is recommended.

Cleaning and Washing:

- Washing agents used during the production to clean the customer application might damage or change the characteristics of the wire insulation body, the marking or the plating. Washing agent may have a negative effect on the long-term functionality of the product.
- Avoid halogen in the flux or any contaminated flux as well as excessively high ultrasonic cleaning.

Coating, molding and potting of the PCB:

- If the product is potted in the costumer application, the potting material might shrink or expand during and after hardening. Shrinking could lead to an incomplete seal, allowing contaminants into the body and termination. Expansion could damage the body or termination. We recommend a manual inspection after potting to avoid these effects.
- When coating and molding the PCB, the quality influence on the resistor must be verified.
- Coating is generally not restricted, but it has to be ensured, that the datasheet values are still met.
- Verify the curing temperature and ensure that there is no harmful decomposing or reaction gas emission during curing.
- When the resistor is coated, potted or molded, the curing stress could cause peeling of the protective coating layer and cracking of the solder fillet, resulting in changes of the electrical and mechanical characteristics.
- If the resin is not 100% capable to prevent moisture diffusion, the electrical values or capabilities may change.
- Do not exceed the maximal temperature rise of 20°C.

Handling:

- After soldering, bending, twisting or distortion during the PCB handling and storage should be avoided.
- Excessive pressure during the functional check of the PCB should be avoided.
- Bending stress while breaking the PCB should be avoided.
- After mounting, piling the PCBs should be avoided, in order to prevent the chip resistor from hitting another board.

Disposal:

- Observe appropriate laws and regulations for handling and disposal of products or packaging materials.

These cautions and warnings comply with the state of the scientific and technical knowledge and are believed to be accurate and reliable. However, no responsibility is assumed for inaccuracies or incompleteness. V2.0

RoHS COMPLIANT
REACh COMPLIANT

WÜRTH ELEKTRONIK
MORE THAN YOU EXPECT

Würth Elektronik eiSos GmbH & Co. KG
EMC & Inductive Solutions
Max-Eyth-Str. 1
74638 Waldenburg
Germany
Tel. +49 (0) 79 42 945 - 0
www.we-online.com
eiSos@we-online.com

CHECKED	REVISION	DATE (YYYY-MM-DD)	GENERAL TOLERANCE	PROJECTION METHOD
FPu	001.000	2023-09-14	DIN ISO 2768-1m	

DESCRIPTION: **WRIS-RSKS Thick Film - Anti-Sulfur General Purpose**

TECHNICAL REFERENCE: KS08050750J104KAATP0000

ORDER CODE: **560112120005**

SIZE/TYPE	BUSINESS UNIT	STATUS	PAGE
0805	eiSos	Valid	8/9

This electronic component has been designed and developed for usage in general electronic equipment only. This product is not authorized for use in equipment where a higher safety standard and reliability standard is especially required or where a failure of the product is reasonably expected to cause severe personal injury or death, unless the parties have executed an agreement specifically governing such use. Moreover Würth Elektronik eiSos GmbH & Co KG products are neither designed nor intended for use in areas such as military, aerospace, aviation, nuclear control, submarine, transportation, transportation signal, disaster prevention, medical, public information network etc.. Würth Elektronik eiSos GmbH & Co KG must be informed about the intent of such usage before the design-in stage. In addition, sufficient reliability evaluation checks for safety must be performed on every electronic component which is used in electrical circuits that require high safety and reliability functions or performance.

Important Notes

The following conditions apply to all goods within the product range of Würth Elektronik eiSos GmbH & Co. KG:

1. General Customer Responsibility

Some goods within the product range of Würth Elektronik eiSos GmbH & Co. KG contain statements regarding general suitability for certain application areas. These statements about suitability are based on our knowledge and experience of typical requirements concerning the areas, serve as general guidance and cannot be estimated as binding statements about the suitability for a customer application. The responsibility for the applicability and use in a particular customer design is always solely within the authority of the customer. Due to this fact it is up to the customer to evaluate, where appropriate to investigate and decide whether the device with the specific product characteristics described in the product specification is valid and suitable for the respective customer application or not.

2. Customer Responsibility related to Specific, in particular Safety-Relevant Applications

It has to be clearly pointed out that the possibility of a malfunction of electronic components or failure before the end of the usual lifetime cannot be completely eliminated in the current state of the art, even if the products are operated within the range of the specifications.
In certain customer applications requiring a very high level of safety and especially in customer applications in which the malfunction or failure of an electronic component could endanger human life or health it must be ensured by most advanced technological aid of suitable design of the customer application that no injury or damage is caused to third parties in the event of malfunction or failure of an electronic component. Therefore, customer is cautioned to verify that data sheets are current before placing orders. The current data sheets can be downloaded at www.we-online.com.

3. Best Care and Attention

Any product-specific notes, cautions and warnings must be strictly observed. Any disregard will result in the loss of warranty.

4. Customer Support for Product Specifications

Some products within the product range may contain substances which are subject to restrictions in certain jurisdictions in order to serve specific technical requirements. Necessary information is available on request. In this case the field sales engineer or the internal sales person in charge should be contacted who will be happy to support in this matter.

5. Product R&D

Due to constant product improvement product specifications may change from time to time. As a standard reporting procedure of the Product Change Notification (PCN) according to the JEDEC-Standard inform about minor and major changes. In case of further queries regarding the PCN, the field sales engineer or the internal sales person in charge should be contacted. The basic responsibility of the customer as per Section 1 and 2 remains unaffected.

6. Product Life Cycle

Due to technical progress and economical evaluation we also reserve the right to discontinue production and delivery of products. As a standard reporting procedure of the Product Termination Notification (PTN) according to the JEDEC-Standard we will inform at an early stage about inevitable product discontinuance. According to this we cannot guarantee that all products within our product range will always be available. Therefore it needs to be verified with the field sales engineer or the internal sales person in charge about the current product availability expectancy before or when the product for application design-in disposal is considered. The approach named above does not apply in the case of individual agreements deviating from the foregoing for customer-specific products.

7. Property Rights

All the rights for contractual products produced by Würth Elektronik eiSos GmbH & Co. KG on the basis of ideas, development contracts as well as models or templates that are subject to copyright, patent or commercial protection supplied to the customer will remain with Würth Elektronik eiSos GmbH & Co. KG. Würth Elektronik eiSos GmbH & Co. KG does not warrant or represent that any license, either expressed or implied, is granted under any patent right, copyright, mask work right, or other intellectual property right relating to any combination, application, or process in which Würth Elektronik eiSos GmbH & Co. KG components or services are used.

8. General Terms and Conditions

Unless otherwise agreed in individual contracts, all orders are subject to the current version of the “General Terms and Conditions of Würth Elektronik eiSos Group”, last version available at www.we-online.com.

RoHS COMPLIANT REACh COMPLIANT

WÜRTH ELEKTRONIK MORE THAN YOU EXPECT

Würth Elektronik eiSos GmbH & Co. KG
EMC & Inductive Solutions
Max-Eyth-Str. 1
74638 Waldenburg
Germany
Tel. +49 (0) 79 42 945 - 0
www.we-online.com
eiSos@we-online.com

CHECKED	REVISION	DATE (YYYY-MM-DD)	GENERAL TOLERANCE	PROJECTION METHOD
FPu	001.000	2023-09-14	DIN ISO 2768-1m	

DESCRIPTION: **WRIS-RSKS Thick Film - Anti-Sulfur General Purpose**

TECHNICAL REFERENCE: KS08050750J104KAATP0000

ORDER CODE: **560112120005**

SIZE/TYPE	BUSINESS UNIT	STATUS	PAGE
0805	eiSos	Valid	9/9

This electronic component has been designed and developed for usage in general electronic equipment only. This product is not authorized for use in equipment where a higher safety standard and reliability standard is especially required or where a failure of the product is reasonably expected to cause severe personal injury or death, unless the parties have executed an agreement specifically governing such use. Moreover Würth Elektronik eiSos GmbH & Co KG products are neither designed nor intended for use in areas such as military, aerospace, aviation, nuclear control, submarine, transportation, transportation signal, disaster prevention, medical, public information network etc.. Würth Elektronik eiSos GmbH & Co KG must be informed about the intent of such usage before the design-in stage. In addition, sufficient reliability evaluation checks for safety must be performed on every electronic component which is used in electrical circuits that require high safety and reliability functions or performance.

Unikeyic Electronics

Global Electronic Components Distributor

Click to view pricing, inventory, delivery, and lifecycle information:

WURTH:

744393665015 782963560 865080457015 620307124022 744052002 7443633300 810913006 830003237 830032817 687750225002 140816144200 560112110188 71206415 74408942330 74437529203220 784773147 860080275016 865230657014 560112110239 64900821122 687640141002 971100477 714726110106 636201040300 64900221122 78438335033HT 810912012 665102131822 686124183822 74438334022