115.111.129.98KSO..-PPLinear-Kugellager

Linear ball bearings KSO20-PP

(Series KSO..-PP)

open design, lip seals on both sides

The datasheet is only an overview of dimensions and basic load ratings of the selected product. Please always observe all the guidelines in these overview pages. Further information is given on many products under the menu item "Description". You can also order comprehensive information via the Catalogue ordering system (https://www.schaeffler.de/content.schaeffler.de/en/news_media/index.jsp) or by telephone on +49 (91 32) 82 - 28 97.

F_w	20	mm	
D	32	mm	
L	45	mm	
	6		Number of rows of balls
1)			Main load direction
B_2	10	mm	Dimension B2 on diameter Fw
N_1	3	mm	Hole position symmetrical to bearing length L. Only one lubrication and fixing hole each.
N_4	3	mm	Hole position symmetrical to bearing length L. Only one lubrication and fixing hole each.
α	60	°	
			With initial greasing, contact seals on both sides.
m	38	g	Mass
			Basic load ratings in main load direction The basic load ratings are only valid for hardened (670 HV +165 HV) and ground shaft raceways.
C_{mean}	2200	N	Basic dynamic load rating
$C_{0\,max}$	2310	N	Basic static load rating

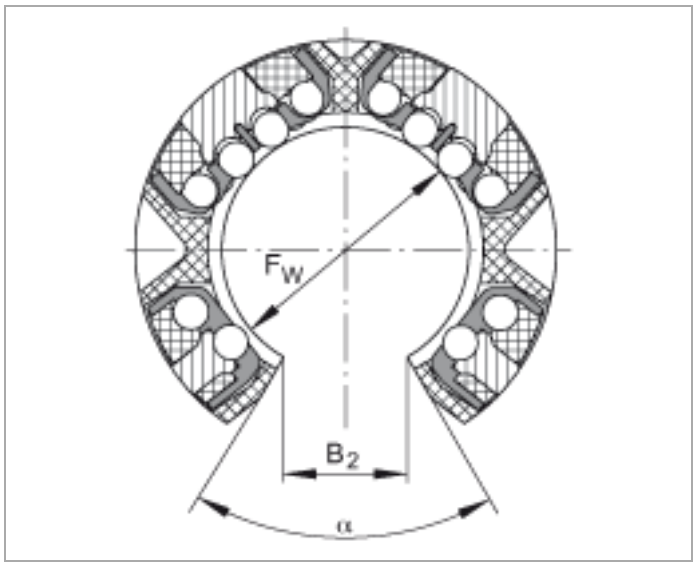
F_W
B_2
α

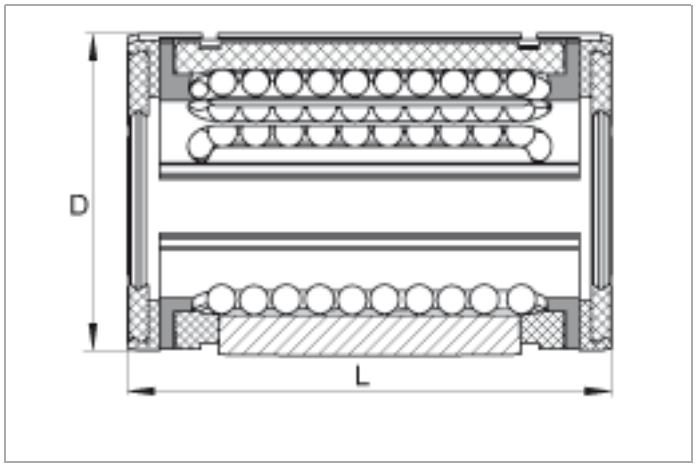
D
L

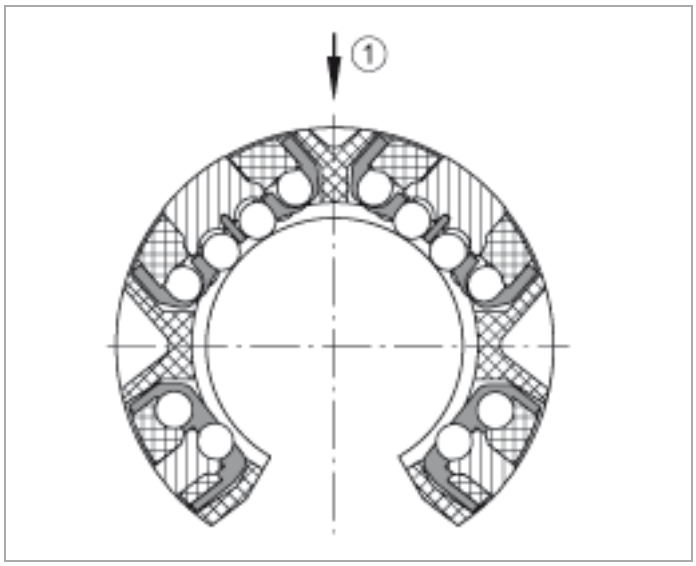
①

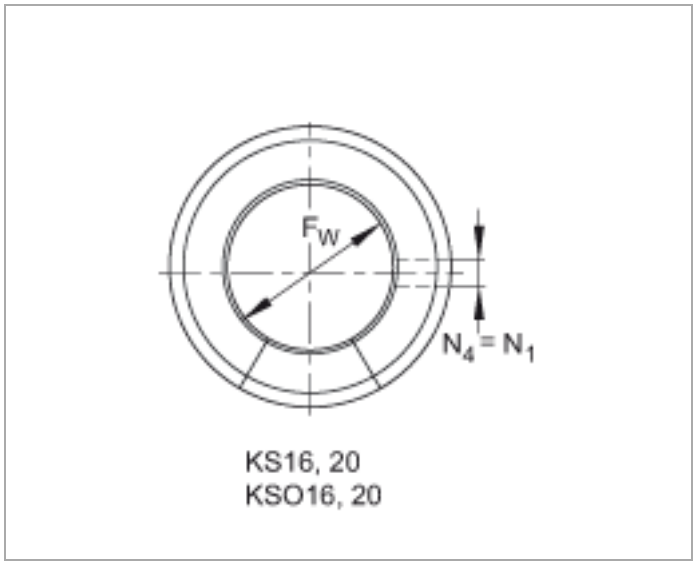

Fixing holes

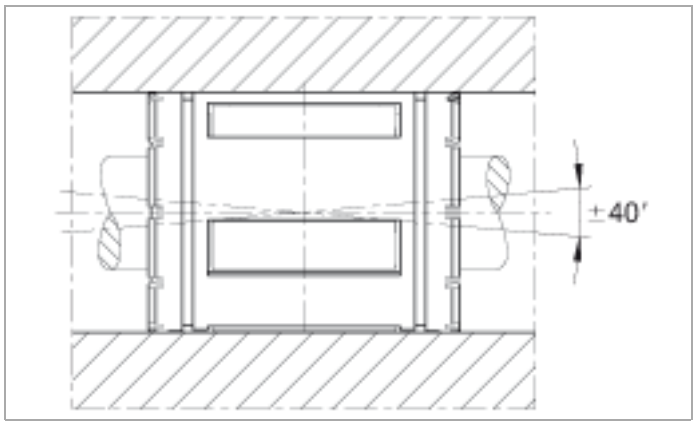

Self-aligning up to +/- 40'