KYCON, Inc. 305 Digital Drive, Morgan Hill, CA 95037 (408)494-0330

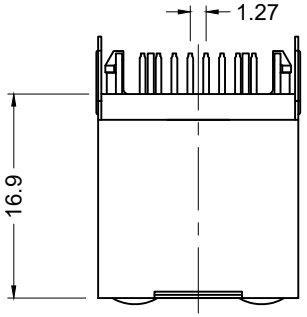

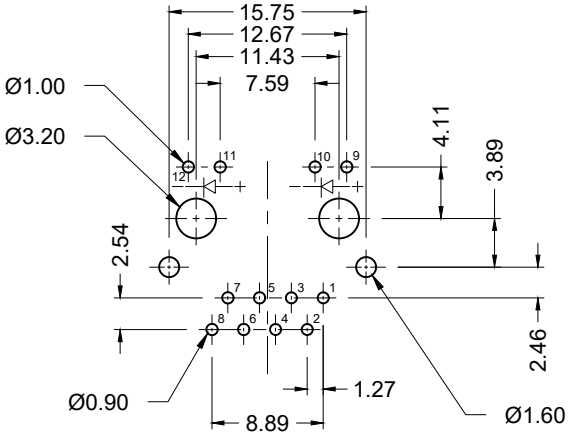

Recommended PCB Layout
(Top View)

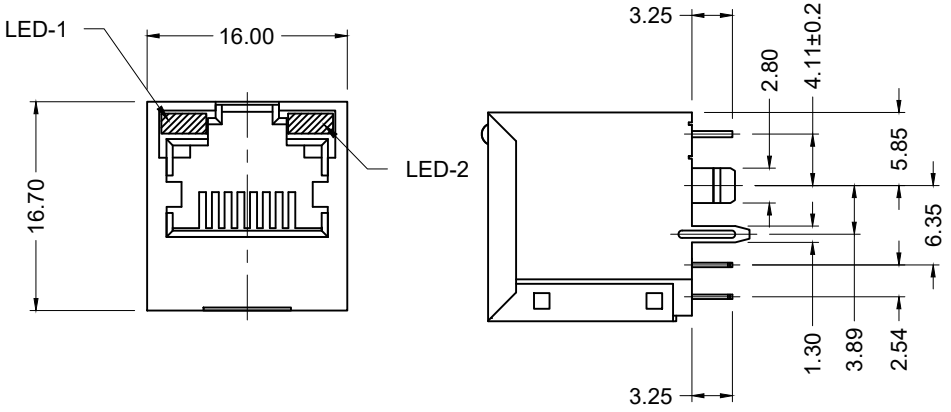

Magnetics Schematic

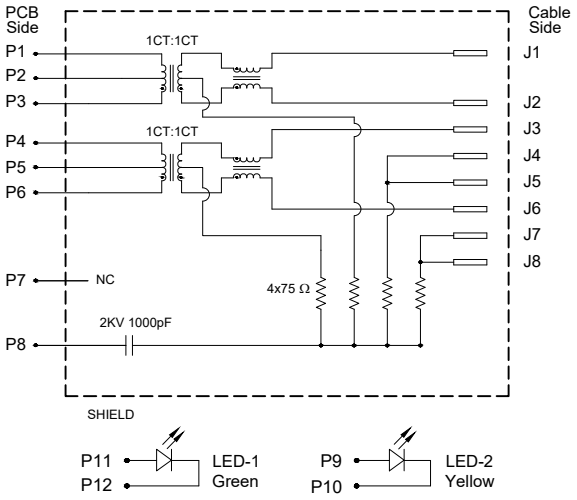

Materials and Finish

Housing: PBT Thermoplastic
UL 94V-0 Rated
Color: Black

Shield: Copper Alloy, Nickel Plated

Contact Material:
Phosphor Bronze

Plating Options:
Standard: Nickel Underplating, Gold Flash Plating on Contact Area and Signal Pin Solder Tails, Tin Plated on LED Solder Tails

50 Option: Nickel Underplating, Contact Area Plated with 50u" Gold to Comply with ANSI/TIA-1096-A, Gold Flash Plating on Signal Pin Solder Tails, Tin Plated on LED Solder Tails

Electrical Characteristics

Insulation Resistance:
500 Megohms Min.

Contact Resistance:
20 milliohms Max.

Dielectric Withstanding Voltage:
500V AC for 1 Minute

Mechanical Characteristics

Durability Rating:
500 Mating Cycles Min.

Operating Temperature:
-40°C to +85°C

Electrical Properties:

Insertion Loss (dB Typ)	Return Loss at 100Ω (dB Min)		Cross Talk (dB Min)	CMR (dB Min)
1~100MHz	1~30MHz	60~80MHz	1~100MHz	30~100MHz
-1.1	-18	-12	-30	-35

Part Number	Contact Area Plating Finish
G3LX-188S1-FF-GY1	Gold Flash (Standard)
G3LX-188S1-FF-GY1-50	50u" Gold (50 Option)

RoHS COMPLIANT

Tolerances
X.X ± 0.35
X.XX ± 0.25
Unless Stated Otherwise

REV.	DATE	DESCRIPTION	REV. BY	CHK. BY
A0	07/28/14	New Drawing	W. Cook	P. DalCanto
A1	07/30/14	Release Drawing	C. Kelleher	N/A
A2	02/12/15	ECO #15-016	D. Gih	H. MA
A3	04/17/15	Update Operating Temp.	W. Cook	C. Furumasu
A4	08/03/16	Update Address	D. Shehan	

DRAWN BY	DATE
W. Cook	05/13/14
	UNITS
	mm

G3LX-188S1-FF-GY1

8P8C ModJack, Vertical, Shielded

w/LED, Magnetics, RoHS Compliant

KYCON

Unikeyic Electronics

Global Electronic Components Distributor

Click to view pricing, inventory, delivery, and lifecycle information:

KYCON:

STX-3081-3C K66X-E15S-N30 K86X-ED-15S-BR15 KUSBVX-AS2N-B-1 STX-3150-3N-1 GDCX-PNS-88 GWLGX-S1488-G/Y KCDX-5S-N2 KMDGX-8S-BS KUSBX-AS2N-B MP44RX-1000 STX-4235-3/5-N GLX-A-64 KF85X-ED-9P-BR K22XHT-E9P-NJ30 K86X-AD-26P KF22X-B25S-NJ KMDGX-10S-BS GDCX-PN-88 K22X-B25S-NJ K88X-CD-37S-BR KLDPX-0207-A-1 KLDVX-SMT-02-ATR KMBX-SMT-5S-S-30TR KUSBVX-SMT-CSB30TRC GSX-NS-88-3.05-50 KMDTX-SMT-6S-BSC GLX-S-88M GSX-NS-88-3.05 KPJXHT-4S