AP3012K
EVB User Guide

1.5MHz, Step-Up DC/DC Converter

DESCRIPTION

The AP3012 is a high power, constant frequency, current mode PWM, inductor based, step-up (boost) converter. The converter operates at high frequency (1.5MHz) so that a small, low profile inductor can be used.

The AP3012 has built-in overvoltage protection (OVP) to allow the device to go into shutdown mode when the output voltage exceeds the OVP threshold of 29V.

The AP3012 is available in standard SOT25 package.

FEATURES

- High Efficiency up to 81%
- Adjustable Output Voltage up to 29V
- Shutdown Current 1μA Typical
- 1.5MHz Switching Frequency
- 36V 500mA Rugged Integrated Bipolar Switch
- Built-in Soft-start to Reduce Inrush Current During Start-up
- On-chip Overvoltage Protection

APPLICATIONS

- LCD/OLED Display Bias Supply
- White LED Driver for LCD Display Backlights
- Cellular Phones

RECOMMENDED OPERATING CONDITIONS

Symbol	Parameter	Min	Max	Unit
VIN	Input Voltage	2.6	16	V
T_{OP}	Operating Temperature	-40	85	°C

ABSOLUTE MAXIMUM RATINGS

Symbol	Parameter	Rating	Unit
V_{IN}	Input Voltage	20	V
—	SW Voltage	38	V
—	FB Voltage	5	V
—	$\overline{SHDN}$ Voltage	16	V
θ_{JA}	Thermal Resistance (Junction to Ambient, no Heat Sink)	265	°C/W
—	Operating Junction Temperature	+150	°C
T_{STG}	Storage Temperature Range	-65 to +150	°C
T_{LEAD}	Lead Temperature (Soldering, 10sec)	+260	°C
—	ESD (Machine Model)	250	V
—	ESD (Human Body Model)	2000	V

© 2024 Copyright Diodes Incorporated. All Rights Reserved.

EVALUATION BOARD

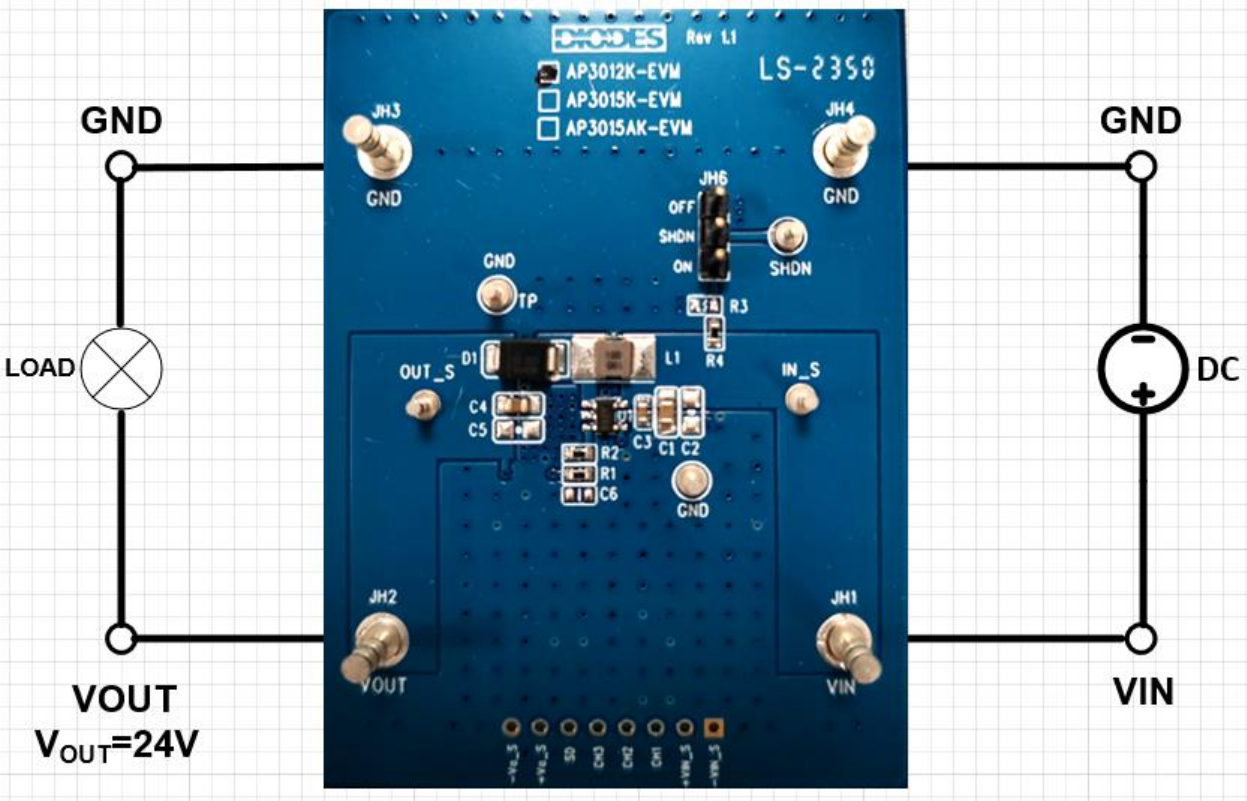

Figure 1. AP3012K-EVM

QUICK START GUIDE

The AP3012K-EVM has a simple layout and allows access to the appropriate signals through test points. To evaluate the performance of the AP3012KTR, follow the procedure below:

1. Connect a power supply to the input terminals VIN and GND. Set VIN to 5V.
2. Connect the positive terminal of the electronic load to VOUT and negative terminal to GND.
3. For Enable, to enable IC, place a jumper at JH6 to “ON” position to connect EN pin to VIN through 100KΩ resistor. Jump to “OFF” position to disable IC.
4. The evaluation board should now power up with a 24V output voltage.
5. Check for the proper output voltage of 24V at the output terminals VOUT and GND. Measurement can also be done with a multimeter with the positive and negative leads between VOUT_S and GND.
6. Set the load to 30mA through the electronic load. Check for the stable operation of the SW signal on the oscilloscope. Measure the switching frequency.

© 2024 Copyright Diodes Incorporated. All Rights Reserved.

MEASUREMENT/PERFORMANCE GUIDELINES:

1) When measuring the output voltage ripple, maintain the shortest possible ground lengths on the oscilloscope probe. Long ground leads can erroneously inject high-frequency noise into the measured ripple.

2) For efficiency measurements, connect an ammeter in series with the input supply to measure the input current. Connect an electronic load to the output for output current.

EVALUATION BOARD SCHEMATIC

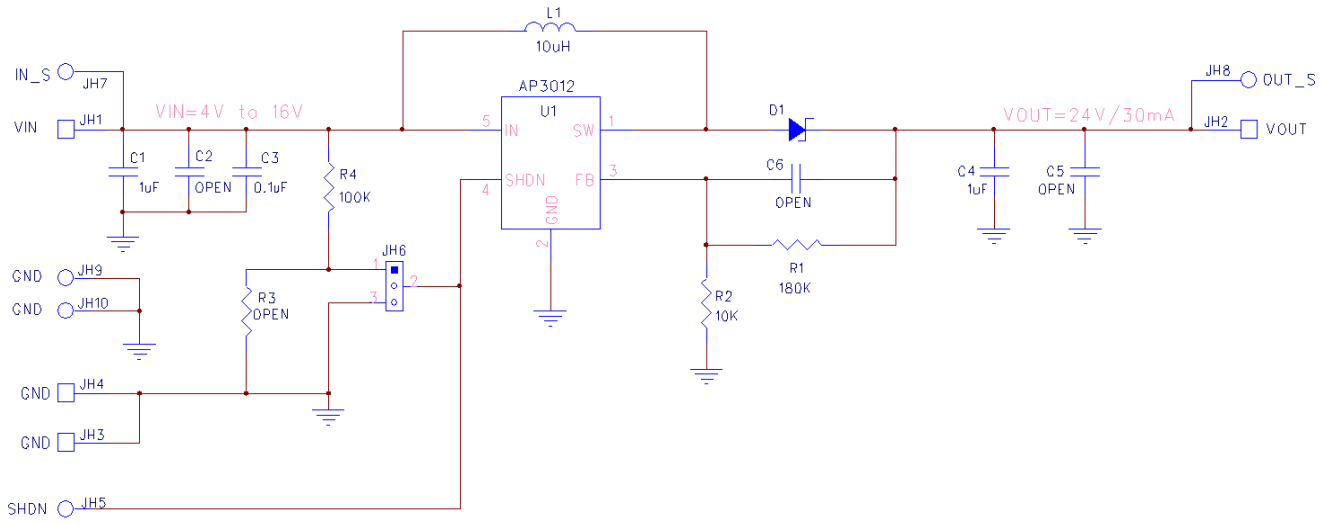

Figure 2. AP3012K-EVM Schematic

© 2024 Copyright Diodes Incorporated. All Rights Reserved.

TOP LAYOUT

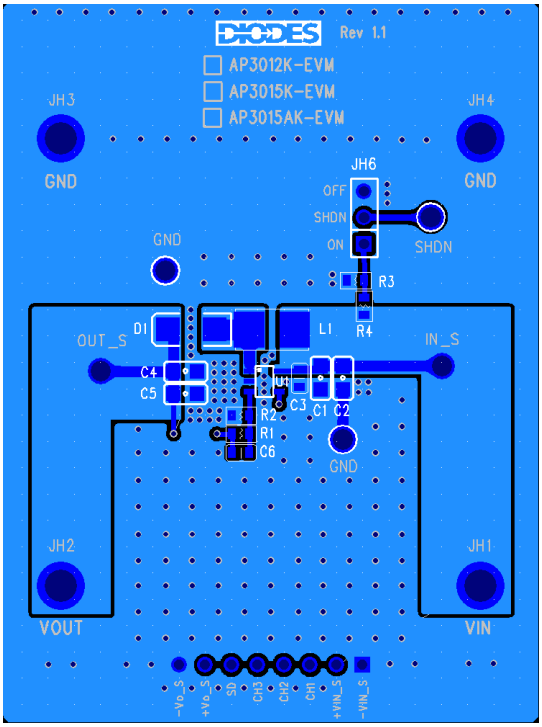

INNER LAYER 2 LAYOUT

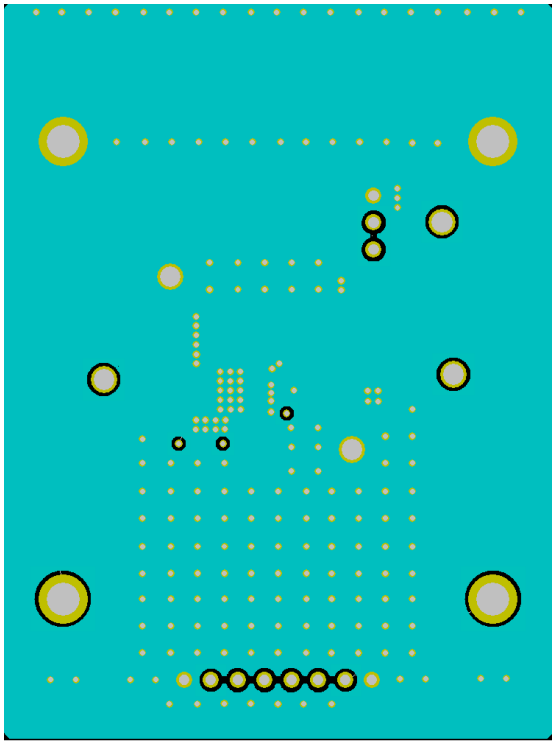

© 2024 Copyright Diodes Incorporated. All Rights Reserved.

INNER LAYER 3 LAYOUT

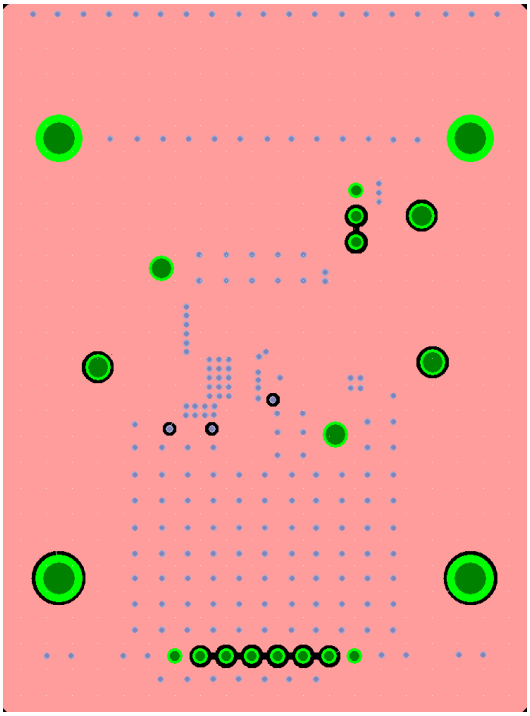

BOTTOM LAYOUT

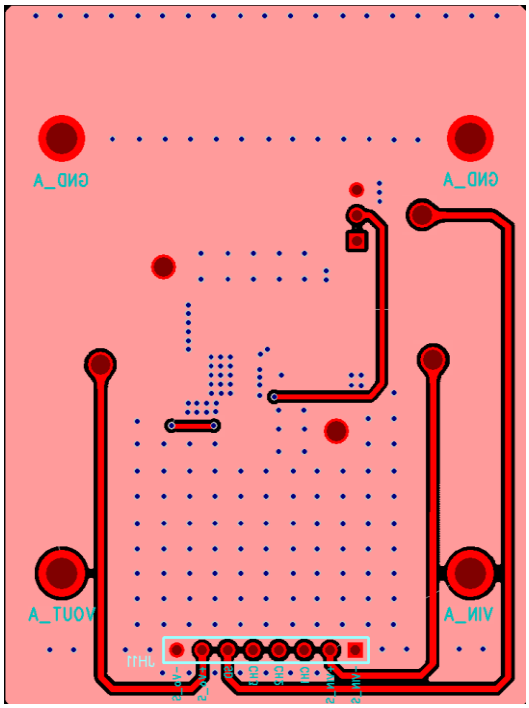

© 2024 Copyright Diodes Incorporated. All Rights Reserved.

BILL OF MATERIALS (BOM) for AP3012K-EVM

Ref	Value	Description	Qty	Size	Vendor Name	Manufacturer PN
C1	1µF	Ceramic Capacitor, 25V, X7R, 10%	1	0805	Murata	GCM21BR71E105KA56L
C3	0.1µF	Ceramic Capacitor, 25V, X7R, 10%	1	0603	Murata	GCJ188R71E104KA12D
C4	1µF	Ceramic Capacitor, 35V, X7R, 10%	1	0805	Murata	GCM21BR7YA105KA55L
R4	100KΩ	RES SMD 1%, 1/10W	1	0603	Panasonic	ERJ-3EKF1003V
R1	180KΩ	RES SMD 1%, 1/10W	1	0603	Panasonic	ERJ-3EKF1803V
R2	10KΩ	RES SMD 1%, 1/10W	1	0603	Panasonic	ERJ-3EKF1002V
L1	10µH	DCR=322mΩ, Ir=1.65A	1	3.0x3.0x2.0 mm	Wurth Electronics	74438336100
D1		Diode Schottky 40V, 1A	1	SMB	Diodes Incorporated (Diodes)	B140B-13-F
JH6		PCB Header, 40 POS	1	1x3	Wurth Electronics	61304011121
IN_S, OUT_S, SHDN, GNDx2	1573	Terminal Turret 0.082" L (Test Points)	5	Through-Hole	Keystone Electronics	1573-2
JH1, JH2, JH3, JH4	1598	Terminal Turret Triple 0.094" L (Test Points)	4	Through-Hole	Keystone Electronics	1598-2
U1	AP3012	Sync DC/DC Converter	1	SOT25	Diodes	AP3012KTR

© 2024 Copyright Diodes Incorporated. All Rights Reserved.

TYPICAL PERFORMANCE CHARACTERISTICS

Figure 3. Efficiency vs. Output Current

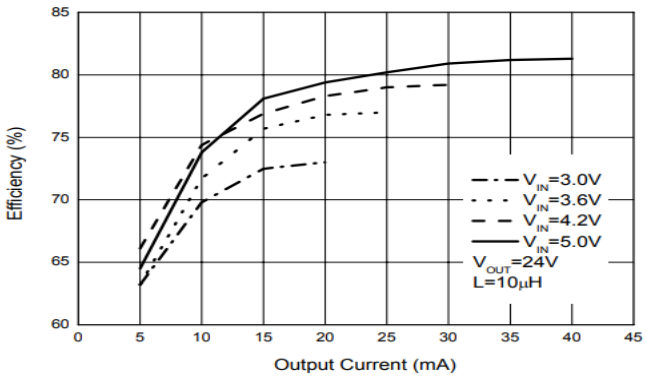

Figure 4. Efficiency vs. Junction Temp

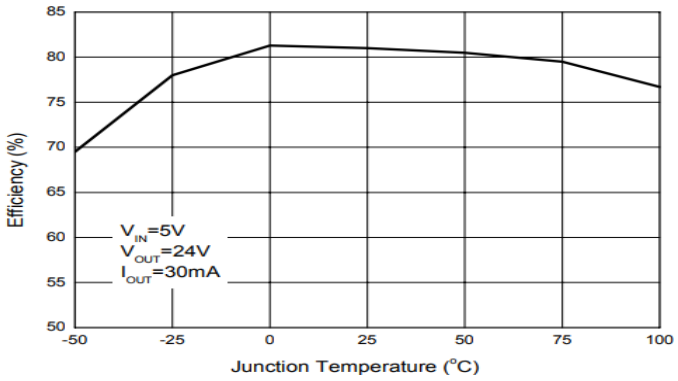

Figure 5. FSW vs. Junction Temp

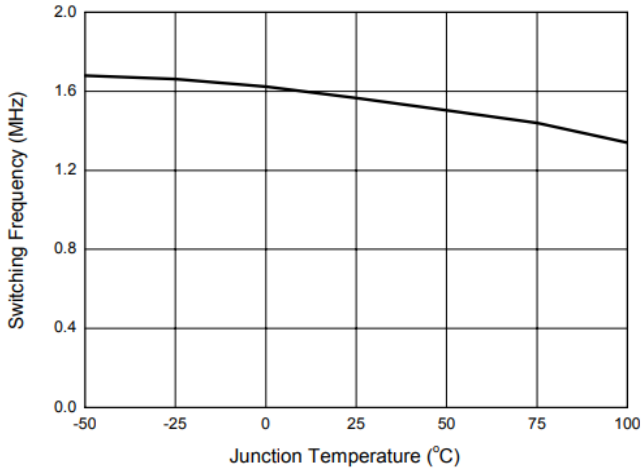

Figure 6. ILIMIT-SWITCH vs. Duty Cycle

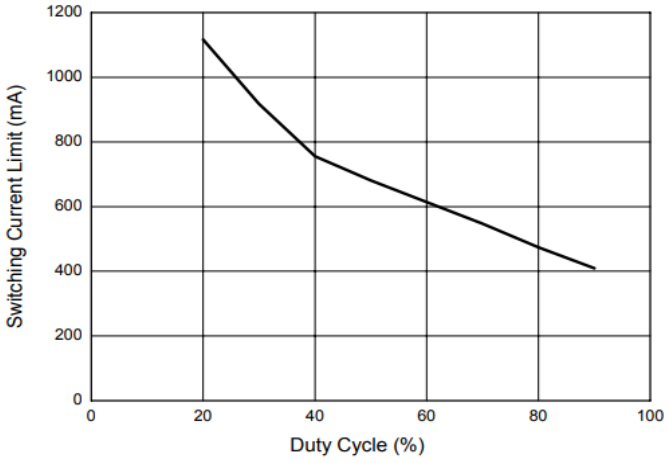

© 2024 Copyright Diodes Incorporated. All Rights Reserved.

IMPORTANT NOTICE

1. DIODES INCORPORATED (Diodes) AND ITS SUBSIDIARIES MAKE NO WARRANTY OF ANY KIND, EXPRESS OR IMPLIED, WITH REGARDS TO ANY INFORMATION CONTAINED IN THIS DOCUMENT, INCLUDING, BUT NOT LIMITED TO, THE IMPLIED WARRANTIES OF MERCHANTABILITY, FITNESS FOR A PARTICULAR PURPOSE OR NON-INFRINGEMENT OF THIRD PARTY INTELLECTUAL PROPERTY RIGHTS (AND THEIR EQUIVALENTS UNDER THE LAWS OF ANY JURISDICTION).

2. The Information contained herein is for informational purpose only and is provided only to illustrate the operation of Diodes' products described herein and application examples. Diodes does not assume any liability arising out of the application or use of this document or any product described herein. This document is intended for skilled and technically trained engineering customers and users who design with Diodes' products. Diodes' products may be used to facilitate safety-related applications; however, in all instances customers and users are responsible for (a) selecting the appropriate Diodes products for their applications, (b) evaluating the suitability of Diodes' products for their intended applications, (c) ensuring their applications, which incorporate Diodes' products, comply the applicable legal and regulatory requirements as well as safety and functional-safety related standards, and (d) ensuring they design with appropriate safeguards (including testing, validation, quality control techniques, redundancy, malfunction prevention, and appropriate treatment for aging degradation) to minimize the risks associated with their applications.

3. Diodes assumes no liability for any application-related information, support, assistance or feedback that may be provided by Diodes from time to time. Any customer or user of this document or products described herein will assume all risks and liabilities associated with such use, and will hold Diodes and all companies whose products are represented herein or on Diodes' websites, harmless against all damages and liabilities.

4. Products described herein may be covered by one or more United States, international or foreign patents and pending patent applications. Product names and markings noted herein may also be covered by one or more United States, international or foreign trademarks and trademark applications. Diodes does not convey any license under any of its intellectual property rights or the rights of any third parties (including third parties whose products and services may be described in this document or on Diodes' website) under this document.

5. Diodes' products are provided subject to Diodes' Standard Terms and Conditions of Sale (https://www.diodes.com/about/company/terms-and-conditions/terms-and-conditions-of-sales/) or other applicable terms. This document does not alter or expand the applicable warranties provided by Diodes. Diodes does not warrant or accept any liability whatsoever in respect of any products purchased through unauthorized sales channel.

6. Diodes' products and technology may not be used for or incorporated into any products or systems whose manufacture, use or sale is prohibited under any applicable laws and regulations. Should customers or users use Diodes' products in contravention of any applicable laws or regulations, or for any unintended or unauthorized application, customers and users will (a) be solely responsible for any damages, losses or penalties arising in connection therewith or as a result thereof, and (b) indemnify and hold Diodes and its representatives and agents harmless against any and all claims, damages, expenses, and attorney fees arising out of, directly or indirectly, any claim relating to any noncompliance with the applicable laws and regulations, as well as any unintended or unauthorized application.

7. While efforts have been made to ensure the information contained in this document is accurate, complete and current, it may contain technical inaccuracies, omissions and typographical errors. Diodes does not warrant that information contained in this document is error-free and Diodes is under no obligation to update or otherwise correct this information. Notwithstanding the foregoing, Diodes reserves the right to make modifications, enhancements, improvements, corrections or other changes without further notice to this document and any product described herein. This document is written in English but may be translated into multiple languages for reference. Only the English version of this document is the final and determinative format released by Diodes.

8. Any unauthorized copying, modification, distribution, transmission, display or other use of this document (or any portion hereof) is prohibited. Diodes assumes no responsibility for any losses incurred by the customers or users or any third parties arising from any such unauthorized use.

9. This Notice may be periodically updated with the most recent version available at https://www.diodes.com/about/company/terms-and-conditions/important-notice

The Diodes logo is a registered trademark of Diodes Incorporated in the United States and other countries.
All other trademarks are the property of their respective owners.
© 2024 Diodes Incorporated. All Rights Reserved.

www.diodes.com

© 2024 Copyright Diodes Incorporated. All Rights Reserved.

Unikeyic Electronics

Global Electronic Components Distributor

Click to view pricing, inventory, delivery, and lifecycle information:

DIODES:

DF04M DZ9F3V6S92-7 SDT3A45SA-13 AP7343D-18W5-7 BC857BT-7-F SBR20A300CTB-13 AL5822W6-7 BAS40-06-7-F SMAJ22CAQ-13-F SMBJ30A-13-F ZXTP718MATA 74AHCT1G02QSE-7 B190-13-F DDTD142JC-7-F FZT605TA S1G-13-F APX809S-46SA-7 DMG1013UWQ-13 DMTH41M8SPS-13 PDS540-13 ZVN4424GTA BZT52C5V1T-7 TLV272IM8-13 ZXMP6A13FQTA 74AHC1G02W5-7 MMBTA13-7-F ZHCS500TA BZT52C3V3LP-7 SDT10A45P5-13 SMCJ24A-13-F