DATASHEET
C0402X5R100-104MNE

GENERAL PURPOSE CERAMIC CAPACITORS (C SERIES)

0402, X5R, 10V, 0.1uF, ±20%, 100% matte Tin(Sn) over Nickel

VENKEL LTD.

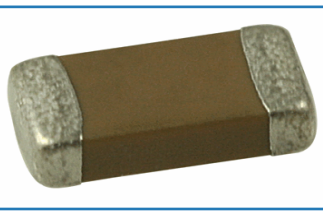

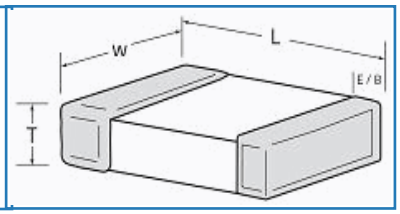

SIZE SPECIFICATIONS units: inches	
Length:	0.040
Width:	0.020
T(max):	0.025
Min E/B:	0.004
Size(EIA):	0402

COMPONENT SPECIFICATIONS	
Category:	Ceramic Capacitors
Series:	General Purpose (C Series)
Size:	0402
Dielectric:	X5R
Voltage:	10V
Capacitance:	0.1uF
Tolerance:	±20%
Termination:	100% matte Tin(Sn) over Nickel
Packaging:	E
Quantity per Reel:	10,000

DIELECTRIC SPECIFICATIONS	
Temperature Coefficient:	0 ±15%Δ˚C MAX
Temperature Voltage Coefficient	X5R not applicable
Ageing:	2.5% per decade hour, typical
Withstanding Voltage:	2.5 times VDCW
Operating Temp:	-55°C to +85°C
Dissipation Factor:	See C Series Datasheet

ENVIRONMENTAL INFORMATION	
RoHS Status	6 of 6 Compliant
REACH Status	Compliant
Halogen Status	Halogen Free
Conflict Mineral Status	Conflict Mineral Free
Moisture Sensitivity Level	MSL1

REFLOW PROFILE	
Max Reflow Temperature	260 °C
Number of Reflow Cycles	2
Time at Max Reflow Temp.	10 sec

REEL DIMENSIONS units: mm

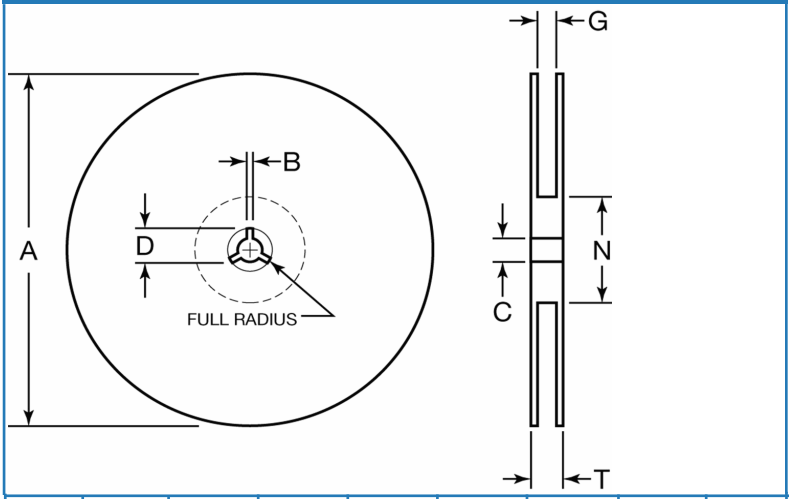

Tape	B min	C	A(7")	A(13")	D Min	N Min	G	T max
8mm	0.30	13 ± .05	178 ± 2.0	330 ± 2.0	20.20	50.00	10 ± 1.5	14.90

TAPING SPECIFICATIONS units: mm

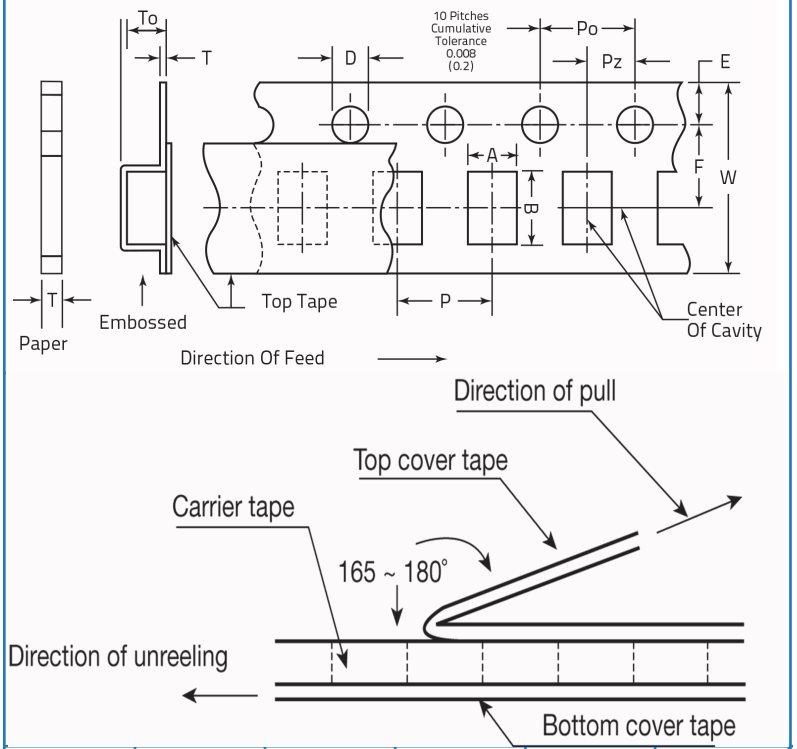

A	B	W	F	E	Po
0.65 ± 0.1	1.10 ± 0.2	8.0 ± 0.2	3.5 ± 0.1	1.75 ± 0.1	4.0 ± 0.1

Pz	D	T	P	To	T(E)
2.0 ± 0.05 - 0.0	1.5 + 0.1	1.15 MAX	2.0 ± 0.05		

(800) 950-8365
www.venkel.com

Unikeyic Electronics

Global Electronic Components Distributor

Click to view pricing, inventory, delivery, and lifecycle information:

VENKEL:

C0805X7R501-102KNP C0201X5R6R3-333KNP-CT C0402C0G250-271FNP C0805X5R500-106KNE C2220X7R500-106MNE CR0201-20W-302JT TFCR1206-8W-E-2001BT C0201X5R100-474MNP C0402C0G250-9R1DNP-CT C0805X5R500-225KNE-CT SMAJ15CAS4-EVL CR1206-8W-1104FT C0402X7R250-822KNE-CT C0603C0G500-390JNP-CT CR0402-16W-3831FT CR0603-16W-8250FT CR1206-4W-7153FT C1206Y5V160-106MNE-CT C0402C0G500-151JNE C0402Z5U250-103MNP-CT C0603C0G250-270KNE-CT C0805X5R250-225KNE C0805X7R201-121MNP-CT C0402HQN500-150FNP C0603X7R101-182KNP-CT C0603Y5V250-104MNE-CT CTL0805FGR1T-CT C0402X5R250-104MNP-CT C0603C0G500-8R2CNE-CT CR0402-16W-9531FT