JYEG

RoHS Compliant

**Tangshan Guoxin Jingyuan Electronics Co.,Ltd**

**Add：Xinxing Electronics Industrial Park, Yutian,Tangshan,Hebei,China**

**TEL: 86-315-6118243** **E-mail: sales@jingyuan.com**

**FAX: 86-315-6113576** **Web : www.jingyuan.com**

# APPROVAL SHEET

Customer :

Part Number :

JYEG P/N : JYD1

Holder : SMD2016

Frequency : 16.000~96.000MHZ

Manufacturer : Guoxin Jingyuan Electronics

Date : 2025/12/20

| Prepared | Checked | Approved |
|---|---|---|
| Huang Mingxing | Yang Tiesheng | Zhang Liqiang |

**(For Customer Use)**

| Acceptable | Non-Acceptable |
|---|---|
| | |

## Revision History

| No. | Revised Date | Change Content | Approved | Remark |
|---|---|---|---|---|
| V1.0 | 25.12.20 | Initial release | Yang Tiesheng | |
| | | | | |
| | | | | |
| | | | | |
| | | | | |
| | | | | |
| | | | | |
| | | | | |
| | | | | |
| | | | | |
| | | | | |
| | | | | |
| | | | | |
| | | | | |
| | | | | |
| | | | | |
| | | | | |
| | | | | |
| | | | | |
| | | | | |
| | | | | |

**1.This specification applies to SMD quartz crystal unit with a frequency of 16.000~96.000MHz.**

**2. Electrical characteristics**

| ITEM/TYPE | SMD2016 |
|---|---|
| Frequency Range | 16.000~96.000MHz |
| Mode of Vibration | Fundamental |
| Frequency Tolerance (at 25°C) | ±10ppm,or specify |
| Frequency Stability Over Operating Temperature Range | ±30ppm/-40~85°C, ±50ppm, ±100ppm/-40~125°C, or specify |
| Shunt Capacitance | 1.5pF Max. |
| Load Capacitance | 6~50pF or Series |
| Resonance Resistance | As per below table1. |
| Drive Level | 300μW Max. |
| Aging | ±2ppm/year |
| Insulation Resistance | 500MΩ@DC100V |
| Storage Temperature Range | -55~125°C |

| Frequency | Resonance Resistance |
|---|---|
| 16.000~20.000MHz | 200Ω Max. |
| 20.000~24.000MHz | 100Ω Max. |
| 24.000~96.000MHz | 50Ω Max. |

**3. Construction**

3.1 Crystal enclosure seal:

■ Seam seal ☐ resistance weld ☐ cold weld

3.2 crystal enclosure medium

☐ nitrogen ■ vacuum ☐ dry air

**4.Dimension:**

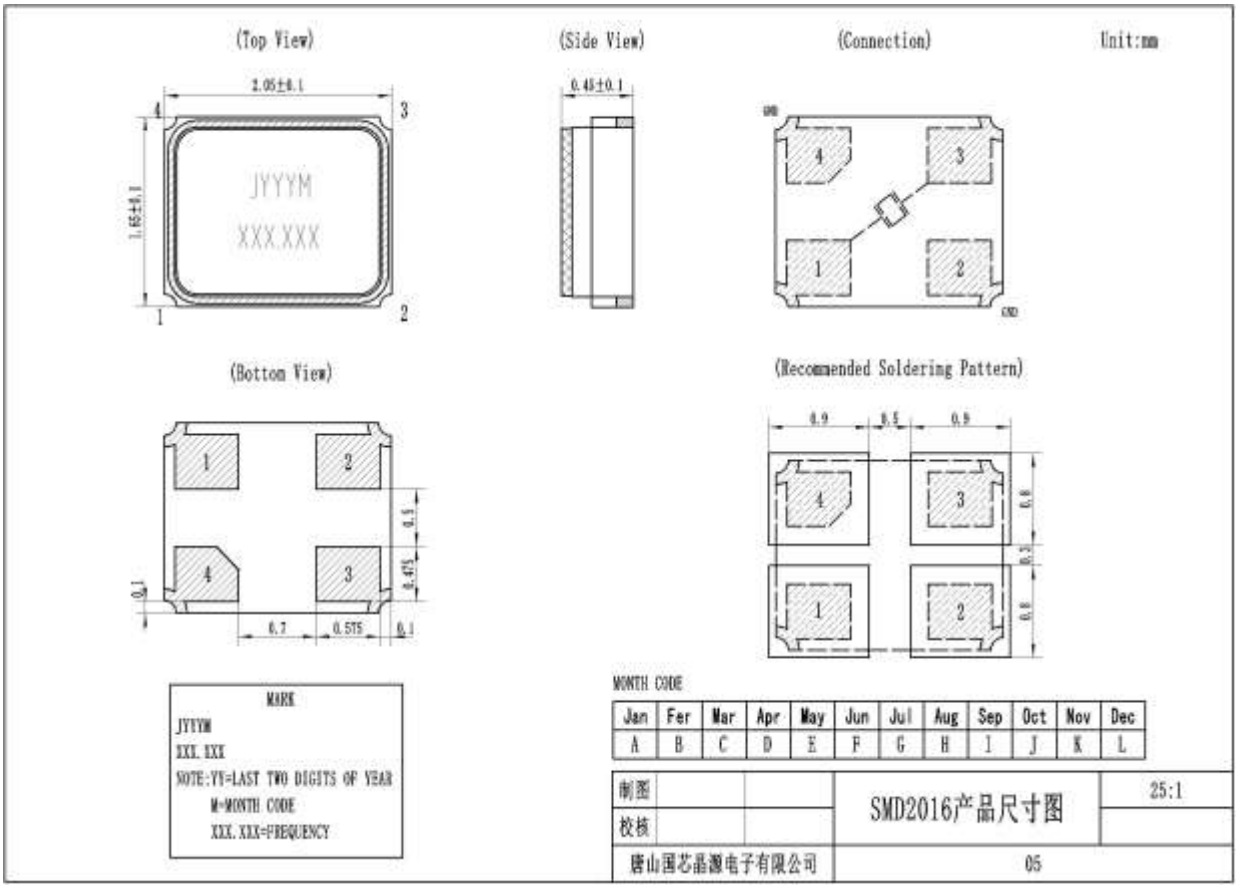


**5. Marking**

■ Laser Marking ☐ Ink Marking

**6.Inside Structure**

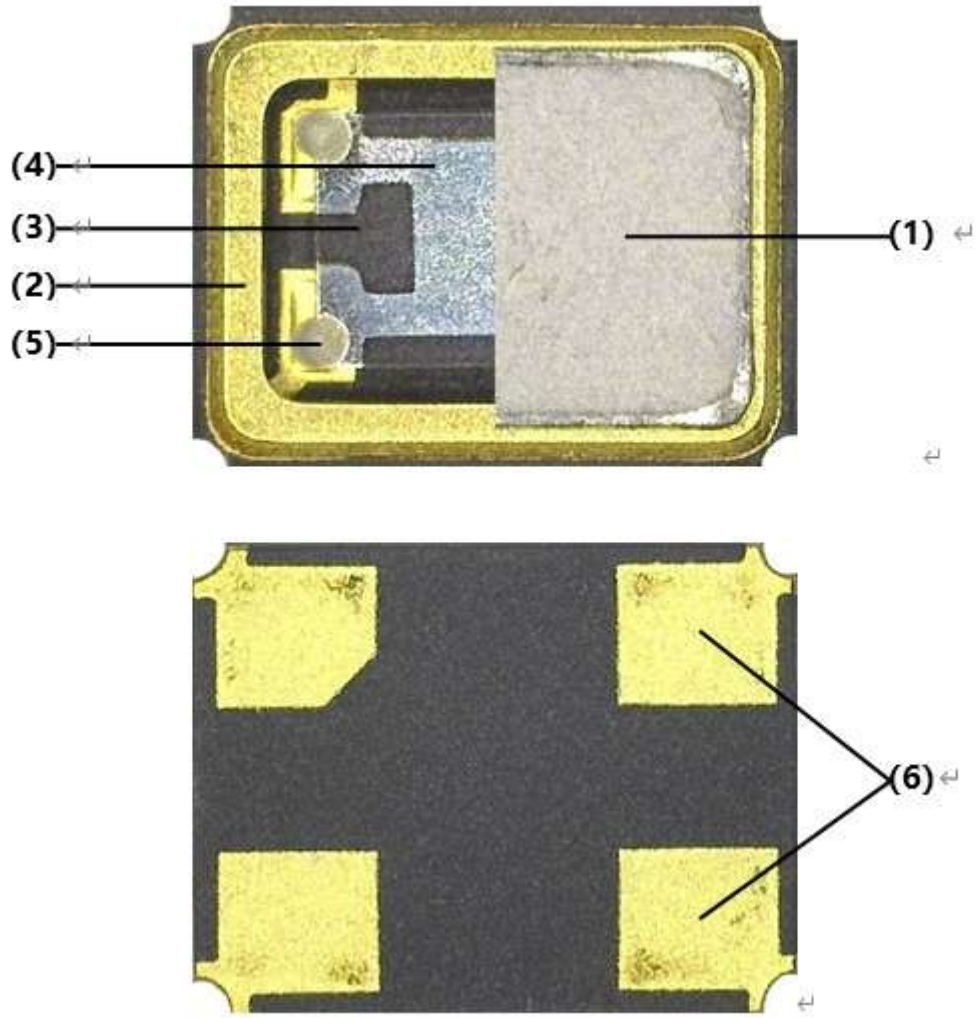


| No. | Name | Material |
|---|---|---|
| (1) | Can | Fe-Co-Ni |
| (2) | Base | Ceramic |
| (3) | Blank | Quartz |
| (4) | Electrode | Ag |
| (5) | Epoxy | Silicon based |
| (6) | Soldering Pads | Au plated |

**7.Taping Dimension and Packing Instruction**

7.1

UNIT:mm

1.Dimensions of Carrier Tape

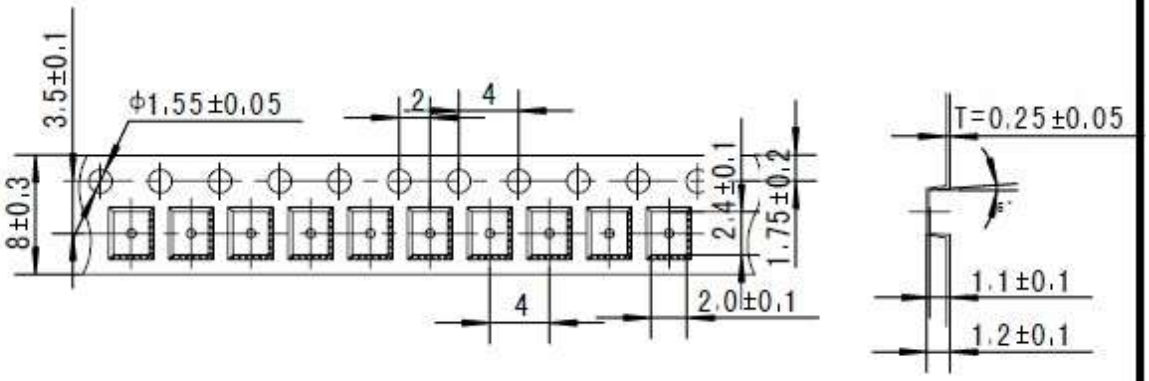


2.Dimensions of Reel

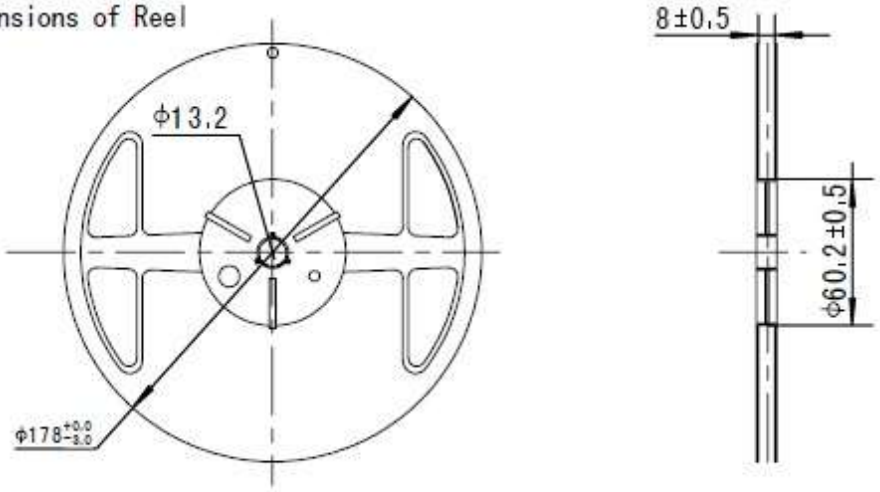


3.Packing

1 reel/box 1 reel=3000pcs

10 boxes/carton(the carton with bubble pad on four sides)

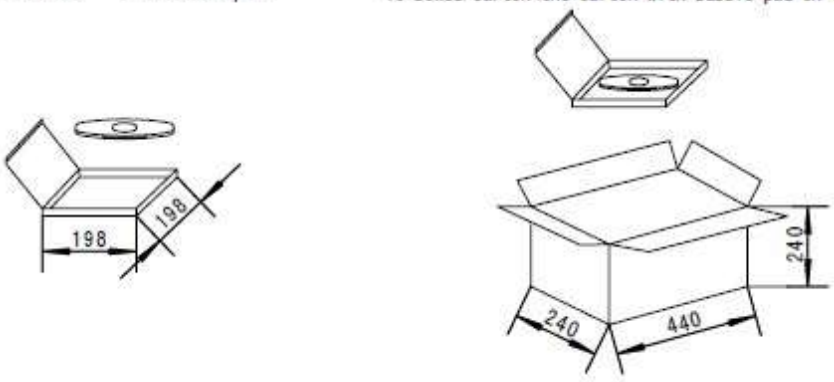

7.2

Release strength of cover tape

It has to between 30g to 90g under following condition.

Pulling direction : 165 deg. to 180 deg.

Speed : 300mm/min.

Otherwise unless specified.

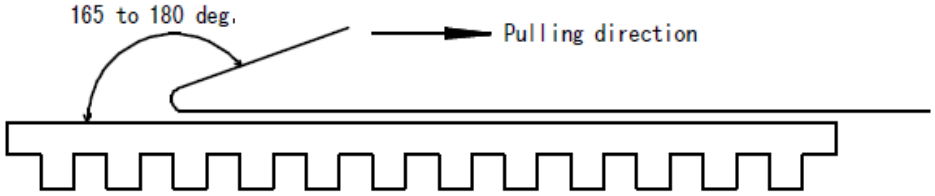


**8.Reliability characteristic:**

| NO | Item | Condition | Specifications | Reference |
|---|---|---|---|---|
| 8.1 | HighTemperature Exposure (Storage)<br>高温存储 | 1000 hrs. at rated operating temperature r 1000 hrs at 85°C. npowered.Measurement at 24±2 hours after test conclusion.<br>元件就贮存在 85°C 下 1000 小时，在试验结束后 24±2 小时测试。 | △F/F0≤+/-10ppm<br>ESR≤5Ωor20% | MIL-STD-202<br>Method 108 |
| 8.2 | Temperature Cycling<br>温度循环 | -40° C to125°C part the1000 cycles will be at that perature rating.Measurement at 24±2 hours after test conclusion.30min maximum dwell time at each temperature extreme. 1 min. maximum transition time.<br>从-40℃~+125°C 1000 次循环。在试验结束后 24±2 小时测试。每个温度的停留时间不超过 30 分钟。转换时间不超过 1 分钟。 | △F/F0≤+/-10ppm<br>ESR≤5Ωor20% | JESD22<br>Method JA-104 |
| 8.3 | Biased Humidity<br>稳态湿热 | 1000 hours 85°C/85%RH. Rated VDD applied with 1MΩ and inverter in parallel, 2X resonator CL capacitors between each resonator leg and GND.Measurement at 24±2 hours after test conclusion.<br>在温度 85°C，湿度 85%的条件下放置 1000 个小时在试验结束后 24±2 小时测试。 | △F/F0≤+/-10ppm<br>ESR≤5Ωor20% | MIL-STD-202<br>Method 103 |
| 8.4 | Operational Life<br>高温寿命 | 125°C 1000 hrs. Measurement at 24±2 hours after test conclusion.<br>125°C 下 1000 个小时，用相同测试线路在时间结束后 24±2 小时测试。 | △F/F0≤+/-10ppm<br>ESR≤5Ωor20% | MIL-STD-202<br>Method 108 |

| | | | | |
|---|---|---|---|---|
| 8.5 | Mechanical Shock 机械冲击 | MIL-STD-202Method 213Figure 1 of Method 213. Condition C<br>见 213 方法，试验条件：半正弦波 峰值 100g 持续时间 6ms<br>速度变化 3.75m/s，对样品 6 个方向 3 次，共 18 次施以冲击 | △F/F0≤+/-10ppm<br>ESR≤5Ωor20% | MIL-STD-202 Method 213 |
| 8.6 | Vibration<br>振动 | MIL-STD-202Method 204<br>5g 的力 20 分钟，用 8*5*0.031 英寸的 PCB 在 3 个方向各做 12 个循环。在 8 英寸边上有 7 个支撑点，在对面的角上两个支撑点。器件安装在任意一个支撑点的 2 英寸范围内。测试从 10HZ-2000HZ. | △F/F0≤+/-10ppm<br>ESR≤5Ωor20% | MIL-STD-202 Method 204 |
| 8.7 | Resistance to Soldering Heat<br>耐焊接热 | Condition B No pre-heat of samples. Note: SingleWave solder - Procedure 1 with solder within 1.5 mm of device body for Leaded. Procedure 1 except 245°C and immerse only to level to cover terminals for SMD.<br>未预热的样品 Condition B. 备注：单波焊接 -Porcedure 1 引脚产品焊料少于 1.5mm,除了 245℃外其他 Procedure 1，SMD 产品浸到覆盖 SMD 引脚。 | △F/F0≤+/-10ppm<br>ESR≤5Ωor20% | MIL-STD-202 Method 210 |
| 8.8 | Solderability<br>可焊性 | 引脚产品： Method A@245℃,category 3.<br>SMD 产品：Method D category3 @260℃<br>√ | Electrical Test not required.<br>Magnification 50 X.>95%tin<br>不测电参数 >95%浸润. | J-STD-002 |
| 8.9 | Board Flex<br>线路板弯曲 | 60 sec minimum holding time.<br>最少保留 60 秒。 | 10 倍放大镜下检查没有明显伤痕。 | AEC Q200-005 |
| 8.10 | Terminal Strength<br>引线、引脚强度 (SMD) | Terminal Strength Surface Mount / Shear Stress Test<br>施加 1.8kg 力 60 sec<br>测试带引脚器件的引脚整体试验。<br>条件： A(2.27Kg) C(227g) | 有明显断裂、伤痕。 | AEC Q200-006 |

**9.All products are RoHs compliant**

**10. Reflow Profile**

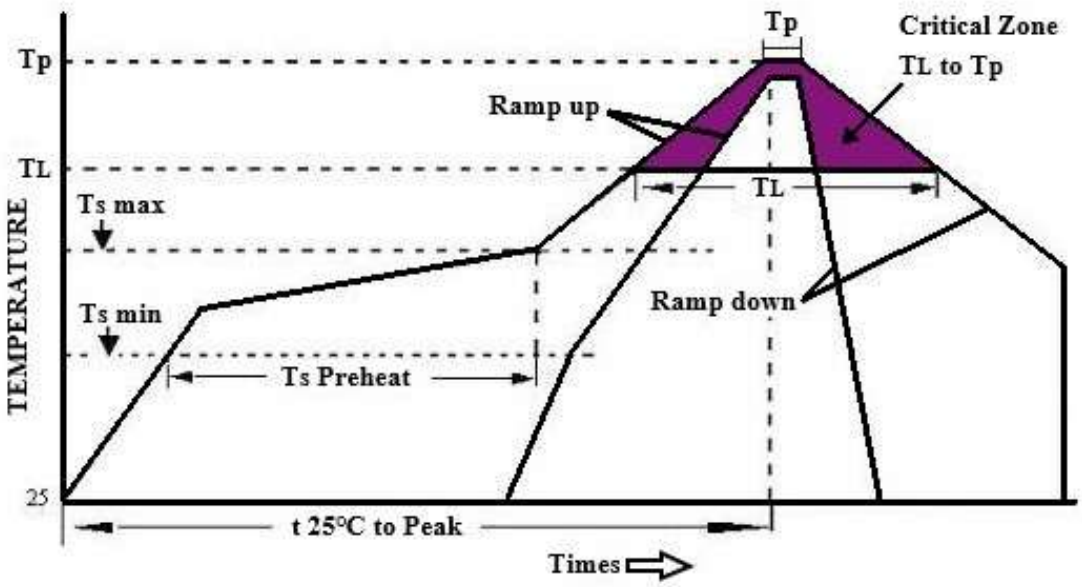


High Temperature Infrared /Convection

Note:Temperature shown are applied to body of device

| | |
|---|---|
| Ts max to $T_L$(Ramp-up Rate) | 3℃/second max |
| Preheat<br>Temperature Min(Ts Min)<br>Temperature Typical( Ts Typ)<br>Temperature Max.(Ts Max)<br>Time(ts) | <br>150℃<br>175℃<br>200℃<br>60-180 seconds |
| Ram-up Rate($T_L$ to Tp) | 3℃/second Max |
| Time Maintained Above:<br>--Temperature($T_L$)<br>--Time($T_L$) | <br>217℃<br>60-150seconds |
| Peak Temperature (Tp) | 260℃ Max for 10 seconds |
| Time within 5℃ of actual peak($t_p$) | 20-40 seconds |
| Ramp-down Rate | 6℃/seconds Max |
| Tune 25℃ to Peak Temperature(t) | 8 minutes Max |
| Moisture Sensitivity Level | Level 1 |

High Temperature Manual Soldering

Note:Temperature shown are applied to body of device

260℃ Max for 10 seconds Max, 4 times Max

# Unikeyic Electronics

Global Electronic Components Distributor

Click to view pricing, inventory, delivery, and lifecycle information:

## JYEG:

JYD2A1G3D9-10-25.000000 JYD3A1C2C4-10-32.000000 JYD3A1Z3E4-10-32.000000
JYD5A1C7GZ-20-9.830400 JYGD5A1E7G6-18-9.830400 JYD5A1G3D9-13-25.000000
JYD5A1C2C4-10-12.288000 JYGD5A1E1B6-18-25.000000 JYOD2H7H3C5Y-25.000000
JYD5A1G7G8-20-25.000000 JYGD5A1G3D8-18-9.830400 JYD5A1C7GZ-12-13.225625
JYD2A1G7G9-18-25.000000 JYD5A1C5G5-10-25.000000 JYD5A1G7GZ-18-25.000000
JYOD5H7G3C5Y-25.000000 JYOD7E7G3C5Y-12.288000 JYOD7H7G3C5Y-10.000000
JYD5A1E7G8-18-25.000000 JYD5A1G7G8-20-10.000000 JYD7A1C7G8-20-10.000000
JYGD3A1G2C8-10-26.000000 JYGD5A1E3D6-20-25.000000 JYD5A1G7G6-20-25.000000
JYD3A1C7G5-14-26.000000 JYD3A1C7G6-9-32.000000 JYD5A1Z2C4-10-27.000000
JYGD3A1E7G8-18-12.288000 JYD2A1Z3F4-10-25.000000 JYD5A1Z7GZ-20-25.000000