REV.	ECN NO.	DATE	SIGN	DESCRIPTION
B	LEN-9A0184~187	2009/04/20	Li Xiu Zhi	Change SR View & Update Note
C	LEN-010038~041	2010/01/05	Tina	Change To Wire Color
D	LEN1490101~104	2014/09/01	Vicky	Update Logo

ALTW
DCC DEPT.
CONFIDENTIAL
2014.09.03
ISSUED

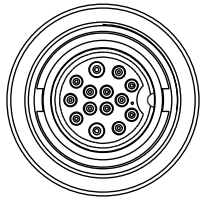

Conn.

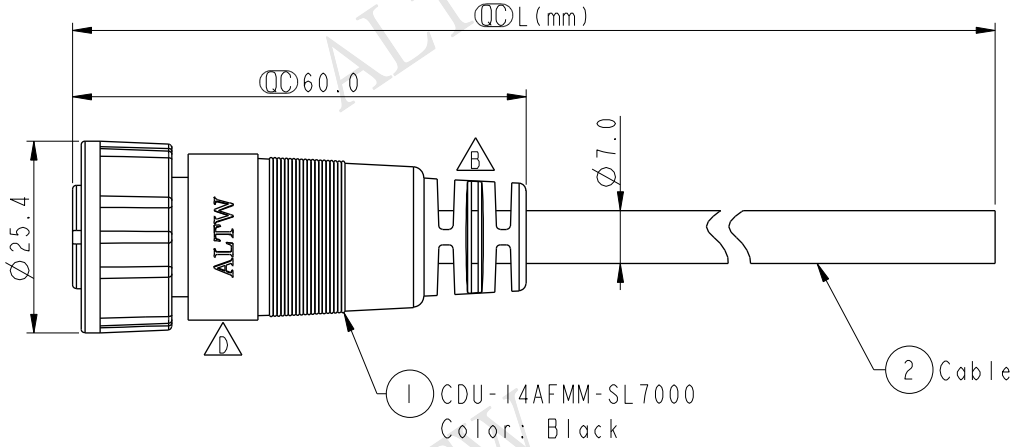

ALTW
CONFIDENTIAL
2014-09-01
R&D DEPT.

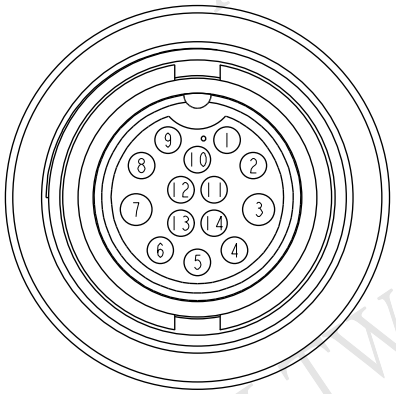

Pin Assignments
Front View

Conn.	Wire Color	
	Pin Out	
14	Brown/White	棕/白
13	Black/White	黑/白
12	Light Green	淺綠
11	Pink	粉紅
10	White	白
9	Gray	灰
8	Purple	紫
7	Blue	藍
6	Green	綠
5	Yellow	黃
4	Orange	橘
3	Red	紅
2	Brown	棕 C
1	Black	黑 C

CDU-14AFMM-SL7AXX

XX :01~99Meters
01 :01Meter
02 :02Meters
:
:
99 :99Meters

Cable Length(L):01~99Meters

B Note:
* QC Important Dimension To Check
* Waterproof Rate: IP67
* Housing: Nylon+GF, Black
* Male Pin: Copper Alloy, Gold Plated
* Screw Nut: Nylon+GF, Black
* O-Ring: EPDM, Black
* Cable: UL2464 24AWG*14C+Drain+Al/My, Black,PVC Jacket,UV Resistant,OD=7.0
* Cable Lenght Tolerance: 01M:±40mm
  02M~05M:±60mm
  06M~10M:±100mm
  11M~30M:±200mm
  31M~99M:±500mm

UNIT:mm

TOLERANCE
±0.5 mm

TITLE: Middle Cable Screw 14Pin F Conn M Pin

SCALE 1:1 | SIZE A4 | SHEET 1 OF 1
REV. D | WC-REV. A.1 | QC:Inspection item

Amphenol LTW
安費諾亮泰企業股份有限公司

ITEM NO		DRAWN BY Vicky	DATE 2014-09-01
DWG NO CDU-14AFMM-SL7AXX		CHECKED BY Sam	DATE 2014-09-01
CUSTOMER ALTW		APPROVED BY Rita	DATE 2014-09-01

FMW10702-01-02A1

THIS DOCUMENT IS SUBJECT TO CHANGE WITHOUT NOTICE. IT IS CONFIDENTIAL AND A PROPERTY OF Amphenol LTW. DISCLOSURE TO THIRD PARTY HAS TO BE AUTHORIZED BY Amphenol LTW.

Mouser Electronics

Authorized Distributor

Click to View Pricing, Inventory, Delivery & Lifecycle Information:

Amphenol:

CDU-14AFMM-SL7A10 CDU-14AFMM-SL7A05 CDU-14AFMM-SL7A01 CDU-14AFMM-SL7A02