User's Guide

LMK1D1208IEVM User's Guide

ABSTRACT

The LMK1D1208I is a high-performance, low-additive jitter LVDS clock buffer with two universal inputs, 8 LVDS outputs, and I2C configurability.

This evaluation module (EVM) is designed to demonstrate the electrical performance of the LMK1D1208I. Throughout this document, the acronym EVM and the phrases evaluation module and evaluation board are synonymous with the LMK1D1208IEVM.

The LMK1D1208IEVM is equipped with 50-Ω SMA connectors and impedance-controlled, 50-Ω, microstrip transmission lines for best performance.

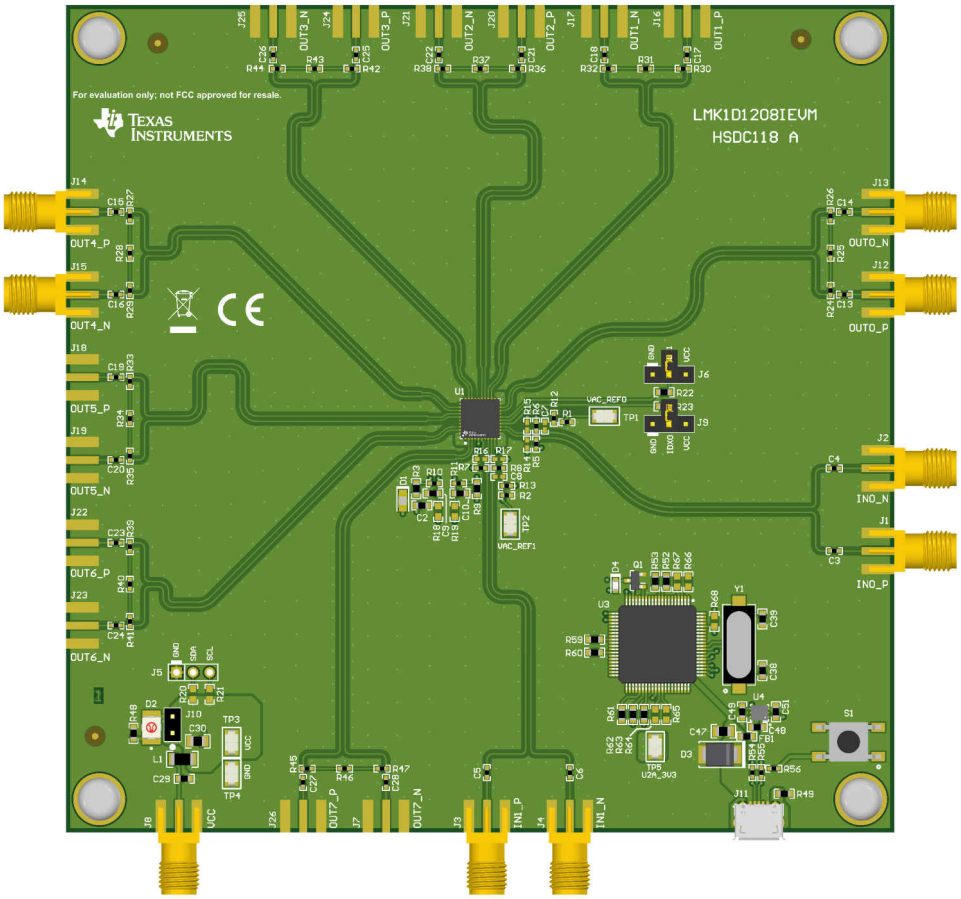

Figure 1-1. LMK1D1208I Evaluation Board

Copyright © 2022 Texas Instruments Incorporated

Table of Contents

1 Features....3
2 General Description....3
3 Signal Path and Control Circuitry....3
4 Getting Started....4
5 Power Supply Connection....5
6 Input Clock....6
6.1 Differential Input....6
6.2 Single-Ended Input....7
7 Output Clock....8
8 Using I2C....9
8.1 I2C Address Selection....11
9 EVM Board Schematic....12
10 Bill of Materials....17
11 REACH Compliance....21

Trademarks

All trademarks are the property of their respective owners.

Copyright © 2022 Texas Instruments Incorporated

1 Features

- Easy-to-use evaluation board to fan out low-phase noise clocks
- Supports output frequencies of up to 2 GHz
- Simple, fast device configuration and setup
- I2C programmable with TICSPRO GUI available
- Single supply input powered at either 1.8 V, 2.5 V, or 3.3 V
- Differential or single-ended input clocks accepted
- EVM supports 8 differential LVDS outputs.

2 General Description

The LMK1D1208I is an I2C-programmable clock buffer that delivers 8 differential LVDS outputs. This device has two universal input buffers which support differential or single-ended clock inputs that can be selected through I2C programming. The device also features on-chip bias generators that can provide LVDS common-mode voltage for AC-coupled differential clock inputs.

The I2C capabilities of this device can be evaluated by connecting a micro-USB cable to the computer and interfacing with the TICS Pro software.

This fully assembled and factory-tested evaluation board allows complete validation of device functionalities. For optimum performance, the board is equipped with SMA connectors and well-controlled, 50-Ω impedance, microstrip transmission lines.

3 Signal Path and Control Circuitry

The LMK1D1208I supports single-ended inputs up to 250 MHz and differential inputs up to 2 GHz. Each device provides up to 8 LVDS outputs that operate at the selected input frequency.

For more information, see the *LMK1D1208I I2C Configurable Low Additive Jitter LVDS Buffer* data sheet (SNAS828) for details.

Copyright © 2022 Texas Instruments Incorporated

4 Getting Started

The EVM has self-explanatory labeling and offers almost the same naming convention used in the data sheets. The ***bold italic*** text in this document follows the same spelling as the actual labeling on the EVM board. By default, the EVM can be used with differential inputs and, after board modification, with single-ended inputs.

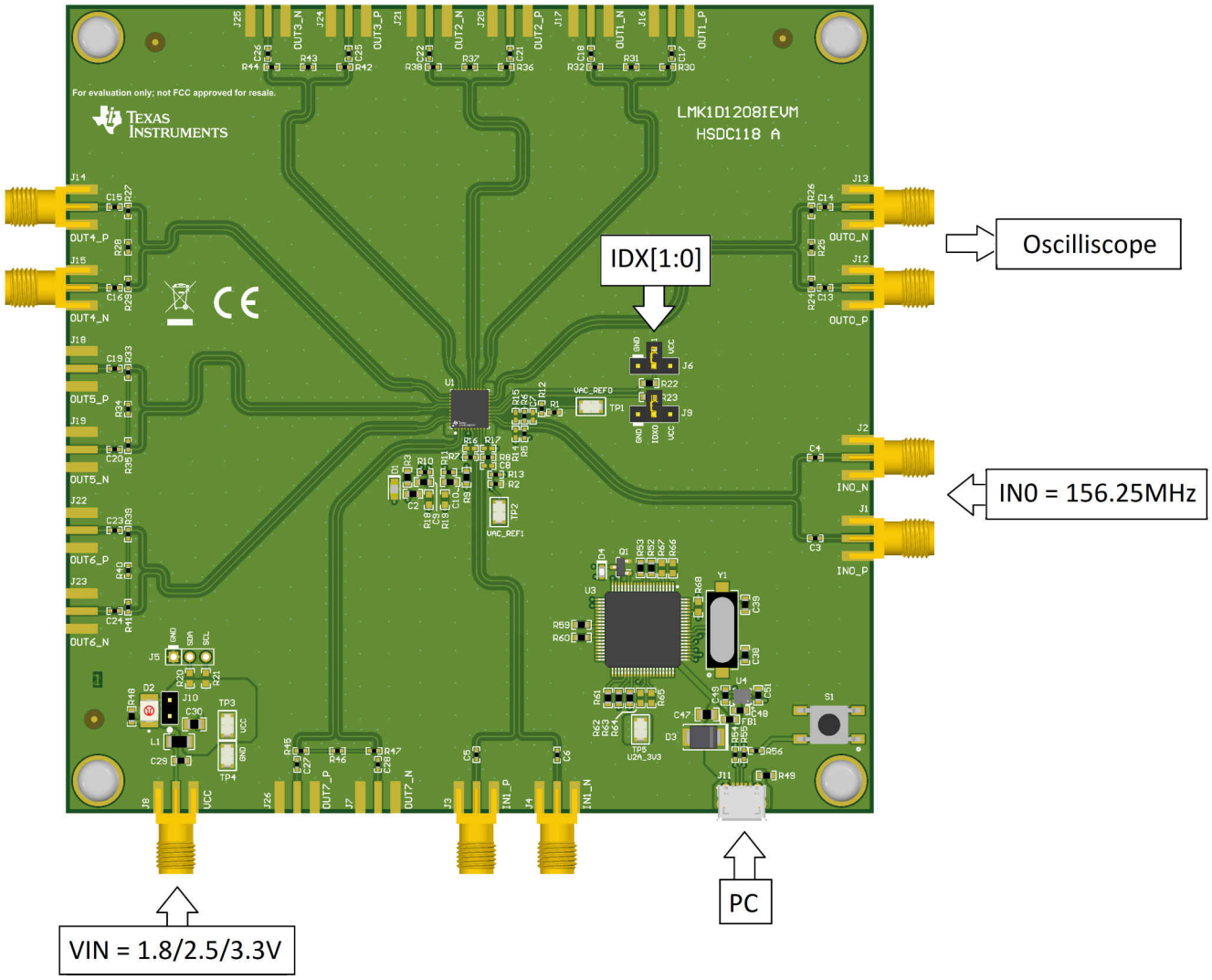

Figure 4-1. LMK1D1208IEVM Quick Start Guide

Copyright © 2022 Texas Instruments Incorporated

5 Power Supply Connection

Connect the power supply source to the SMA connector, ***J8*** (VDD). Test points, ***TP3*** (VCC) and ***TP4*** (GND), can be used as an alternative power supply source. The decoupling capacitors and ferrite bead isolate the EVM power from the power pins of the device.

A supply voltage of 1.71 V to 3.465 V can be used for this EVM.

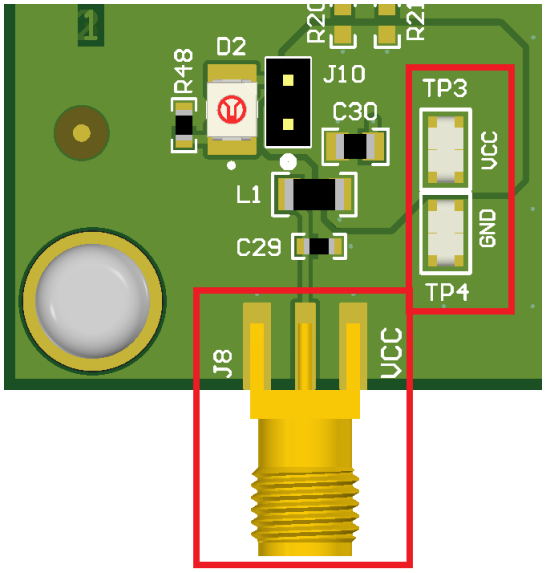

Figure 5-1. Power Supply Connection Layout

Copyright © 2022 Texas Instruments Incorporated

6 Input Clock

The LMK1D1208I can receive either a differential or single-ended clock as input. The default board configuration is for an LVDS differential signal at both device inputs. The inputs can be applied through the SMAs: ***J1, J2*** (IN0_P, IN0_N) or ***J3, J4*** (IN1_P, IN1_N). These inputs are AC-coupled to the device. The common-mode voltage is provided by the device on-chip bias generator (V_{AC_REF} pins), which can be measured at ***TP1*** and ***TP2***.

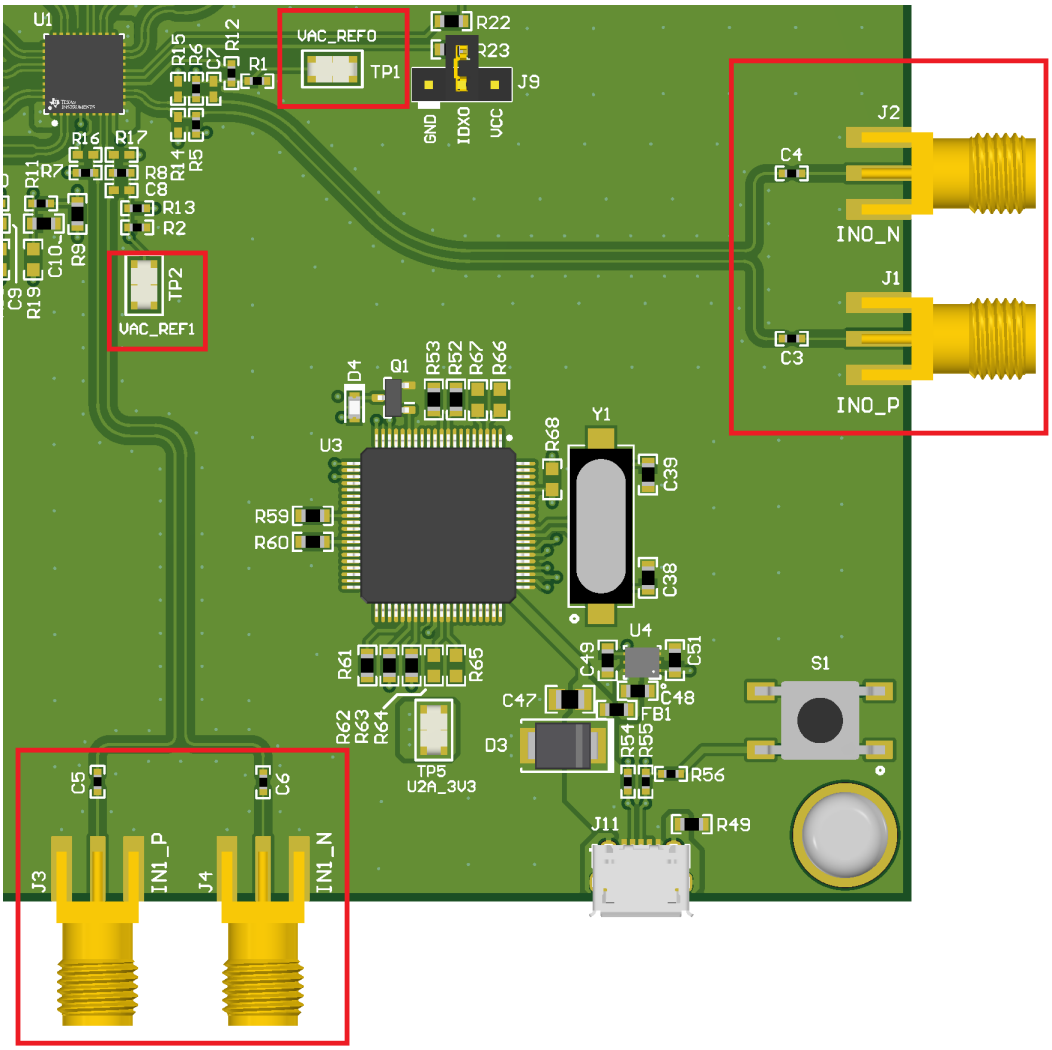

Figure 6-1. Input Clock Selection Layout

6.1 Differential Input

By default, the clock inputs are configured as AC-coupled LVDS inputs with VAC_REF connection.

Copyright © 2022 Texas Instruments Incorporated

6.2 Single-Ended Input

Single-ended input must be configured by replacing or removing passive components on the board. Follow Table 6-1 for proper setup of a single-ended input.

Table 6-1. Single-Ended Configurations by Bias Voltage

BIAS VOLTAGE TO INx_N (V)	INPUT TO INx_P (V)	INPUT	REMOVE BIASING RESISTOR	REMOVE COMMON-MODE RESISTOR	REPLACE WITH 0-Ω RESISTOR	REPLACE WITH 100-Ω RESISTOR
0.9	1.8 (LVCMOS)	IN0_N	R5 R6	R12	C3	N/A
		IN0_P			C4	N/A
0.9	1.8 (LVCMOS)	IN1_N	R7 R8	R13	C5	N/A
		IN1_P			C6	N/A
1.25	2.5 (LVCMOS)	IN0_N	R6	R12	R1 C3, C4	R14 R15
		IN0_P				
1.25	2.5 (LVCMOS)	IN1_N	R8	R13	R2 C5, C6	R16 R17
		IN1_P				
1.65	3.3 (LVCMOS)	IN0_N	R6	R12	R1 C3, C4	R14 R15
		IN0_P				
1.65	3.3 (LVCMOS)	IN1_N	R8	R13	R2 C5, C6	R16 R17
		IN1_P				

Copyright © 2022 Texas Instruments Incorporated

7 Output Clock

The LMK1D1208I generates up to 8 LVDS outputs. Two outputs (OUT0 and OUT4) are available by default on the EVM through the following populated SMAs: ***J12***, ***J13*** (OUT0_P, OUT0_N) and ***J14***, ***J15*** (OUT4_P, OUT4_N).

The LVDS outputs are AC-coupled to their respective SMAs. Each output pair has the 100-Ω termination on the board already populated.

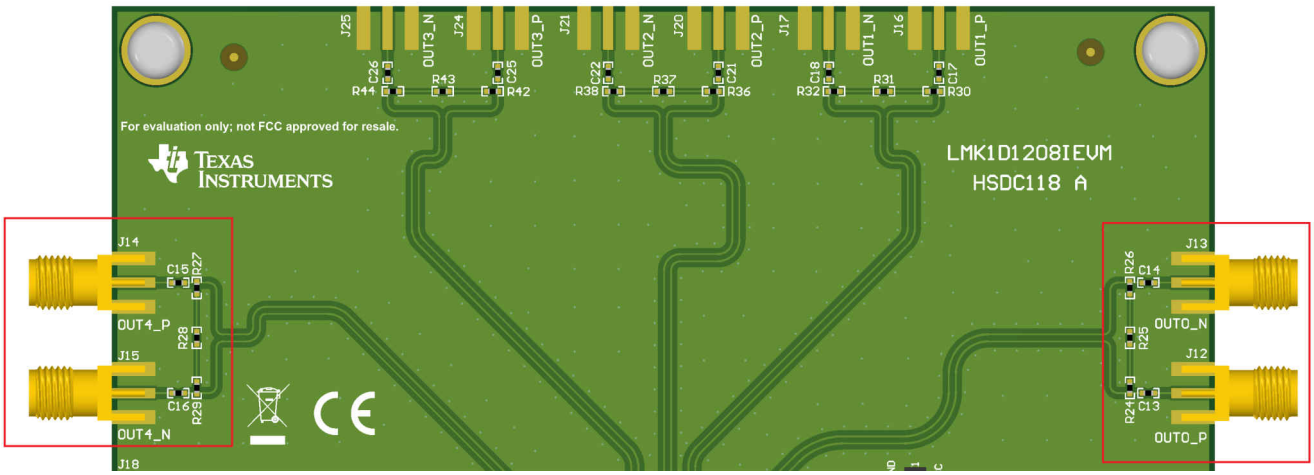

Figure 7-1. Output Clock EVM Layout

Copyright © 2022 Texas Instruments Incorporated

8 Using I2C

The user can program the LMK1D1208I through the TICSPRO software (available for download on ti.com). This GUI allows the user to control the input enables, bank enable/mute controls, individual output enable, and individual output amplitude.

From the TICS Pro toolbar located at the top, click **Select Device** → **Clock Distribution with Divider** → **LMK1D1208I** to access the profile.

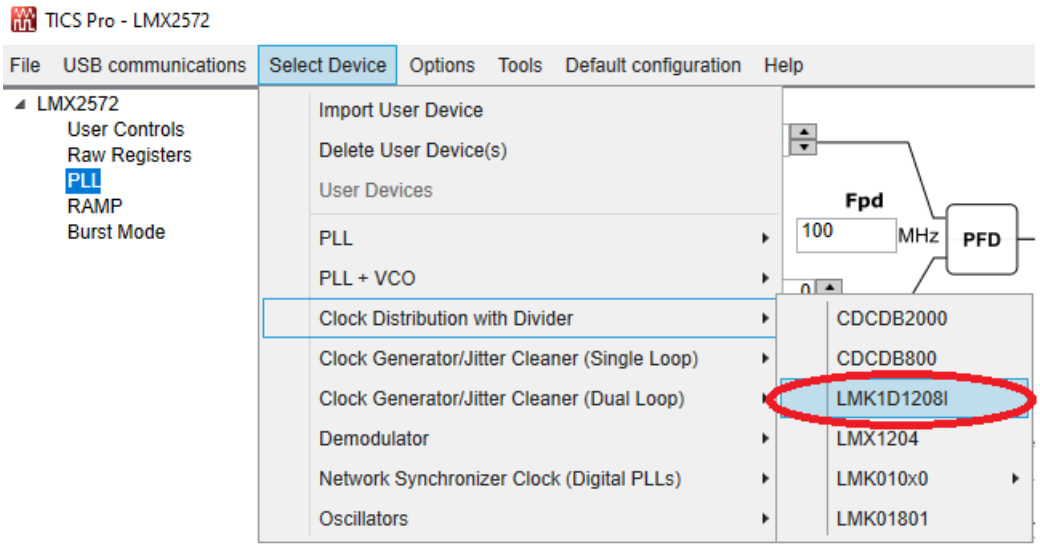

Figure 8-1. Locate the LMK1D1208I Device Profile

Using the same toolbar, click **USB communications** → **Interface** → **USB2ANY** to switch from DemoMode to I2C.

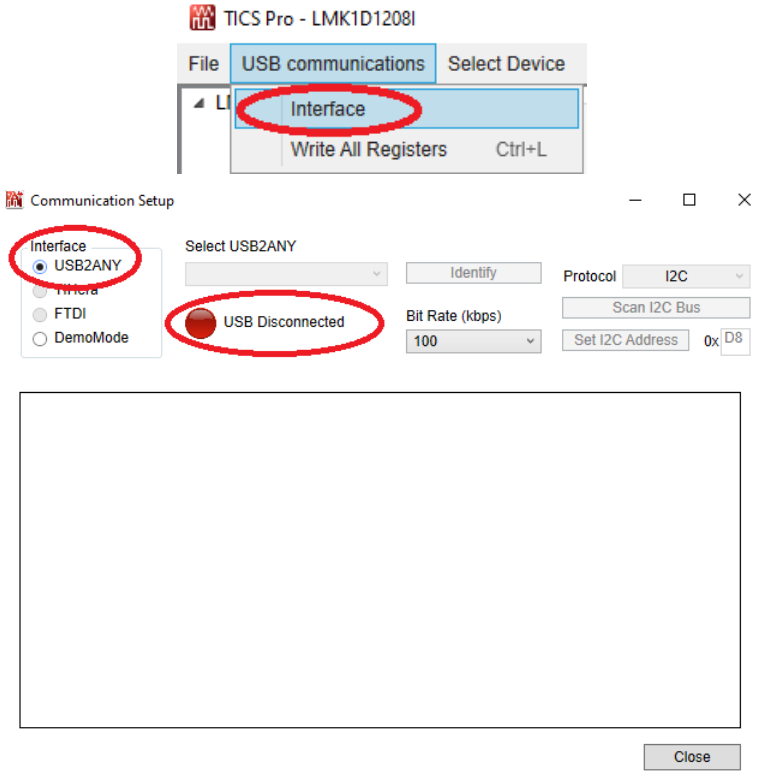

Figure 8-2. Set to I2C Communication

Copyright © 2022 Texas Instruments Incorporated

TI highly recommends that the user only modifies the registers available in the **Main** tab. Using the LMK1D1208I beyond logic states allowed in the GUI should be avoided to ensure performance and prevent device misuse.

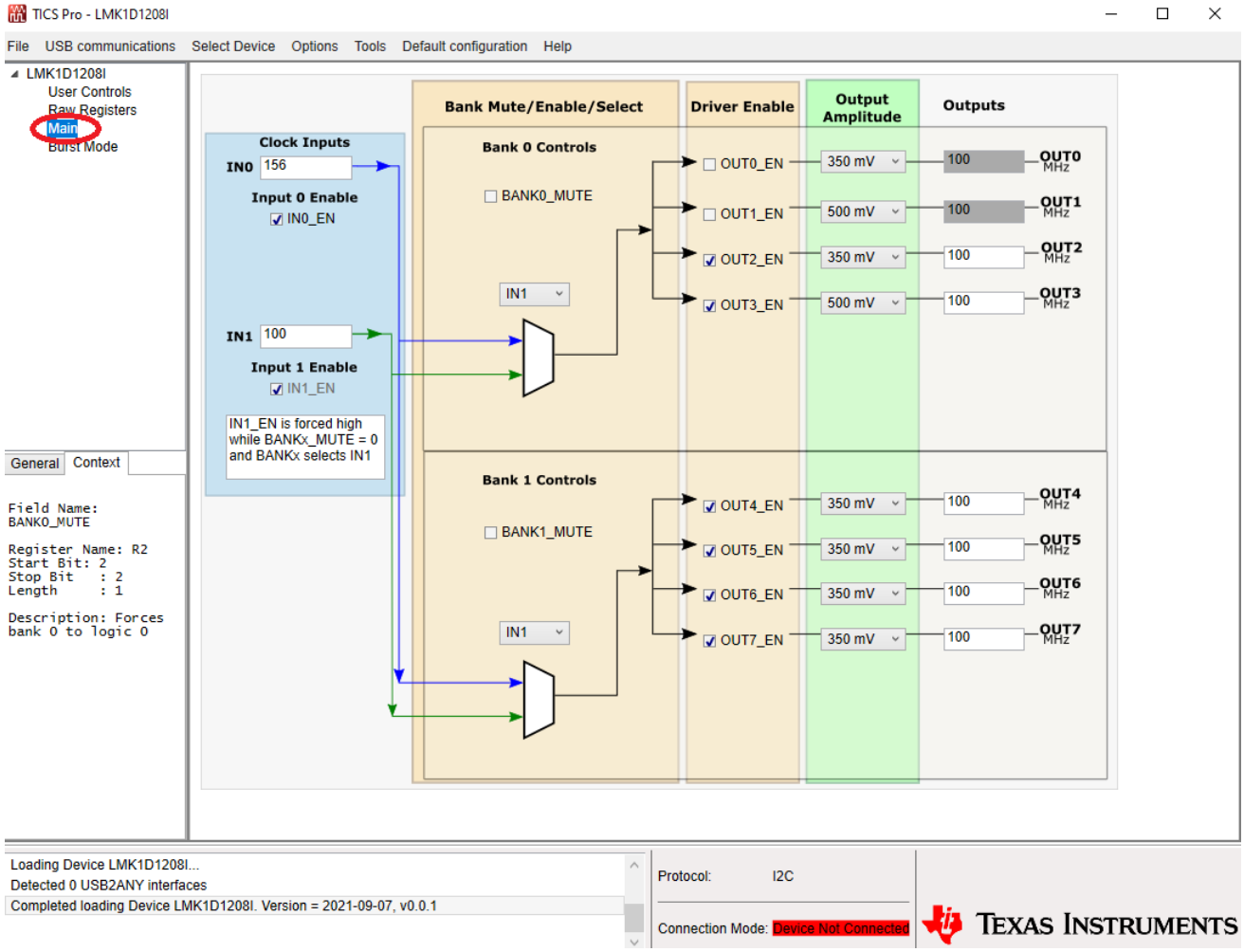

Figure 8-3. LMK1D1208I GUI Main Page

Copyright © 2022 Texas Instruments Incorporated

8.1 I2C Address Selection

The LMK1D1208I can be configured among four different I2C addresses by setting the two-level IDX pins. Jumpers, ***J9*** and ***J6***, are routed to the IDX0 and IDX1 pins and can be connected to VDD or GND. Use Table 8-1 to determine the appropriate jumper layout to select the I2C address.

Table 8-1. I2C Address Assignment

I2C ADDRESS	IDX1	IDX0
0x68	GND	GND
0x69	GND	VDD
0x6A	VDD	GND
0x6B	VDD	VDD

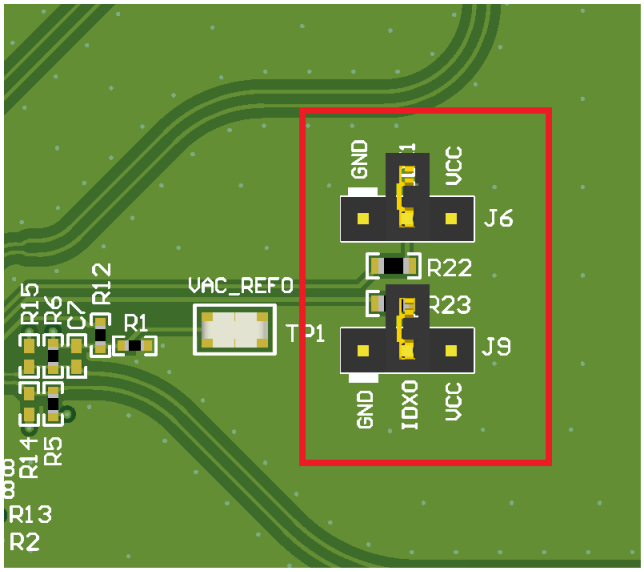

Figure 8-4. I2C Address Selection Layout

Copyright © 2022 Texas Instruments Incorporated

9 EVM Board Schematic

Figure 9-1 shows the printed circuit board (PCB) schematic.

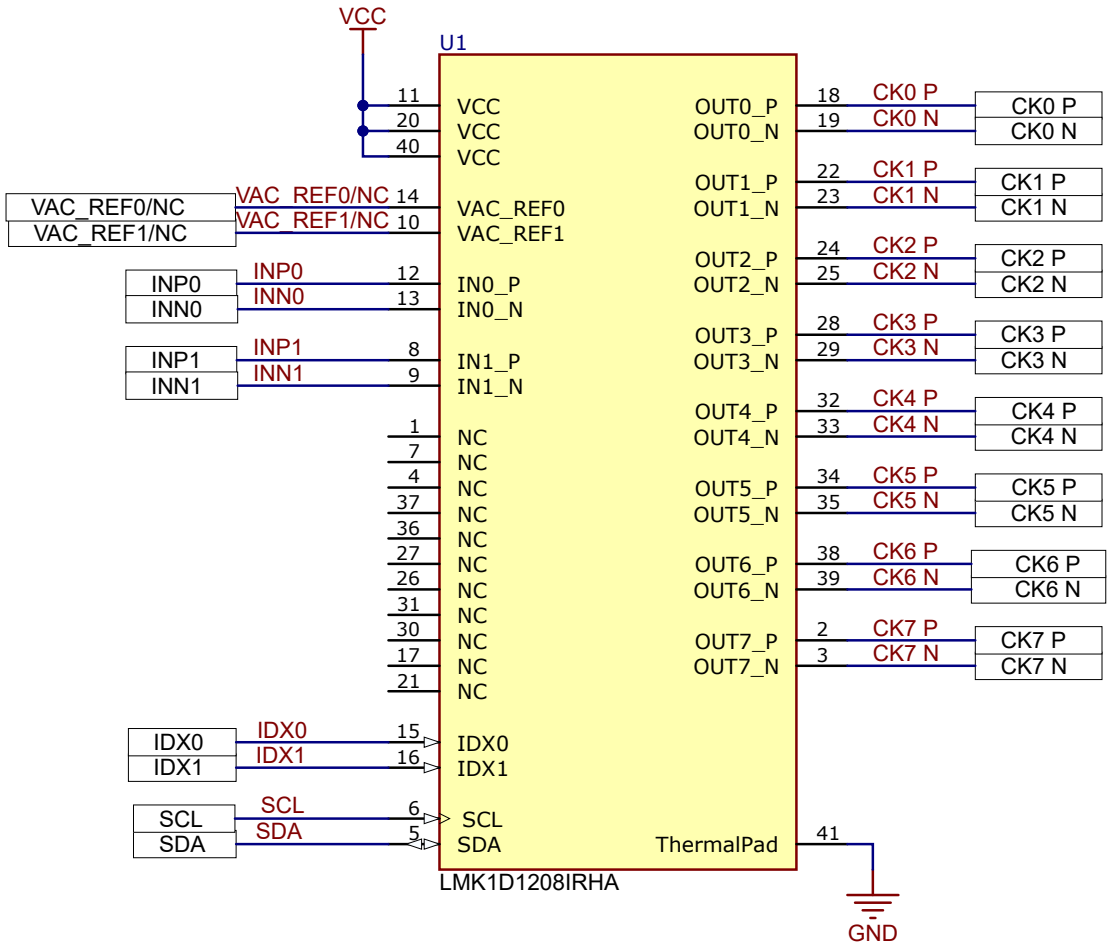

Figure 9-1. LMK1D1208IEVM Schematic: Device Sheet

Copyright © 2022 Texas Instruments Incorporated

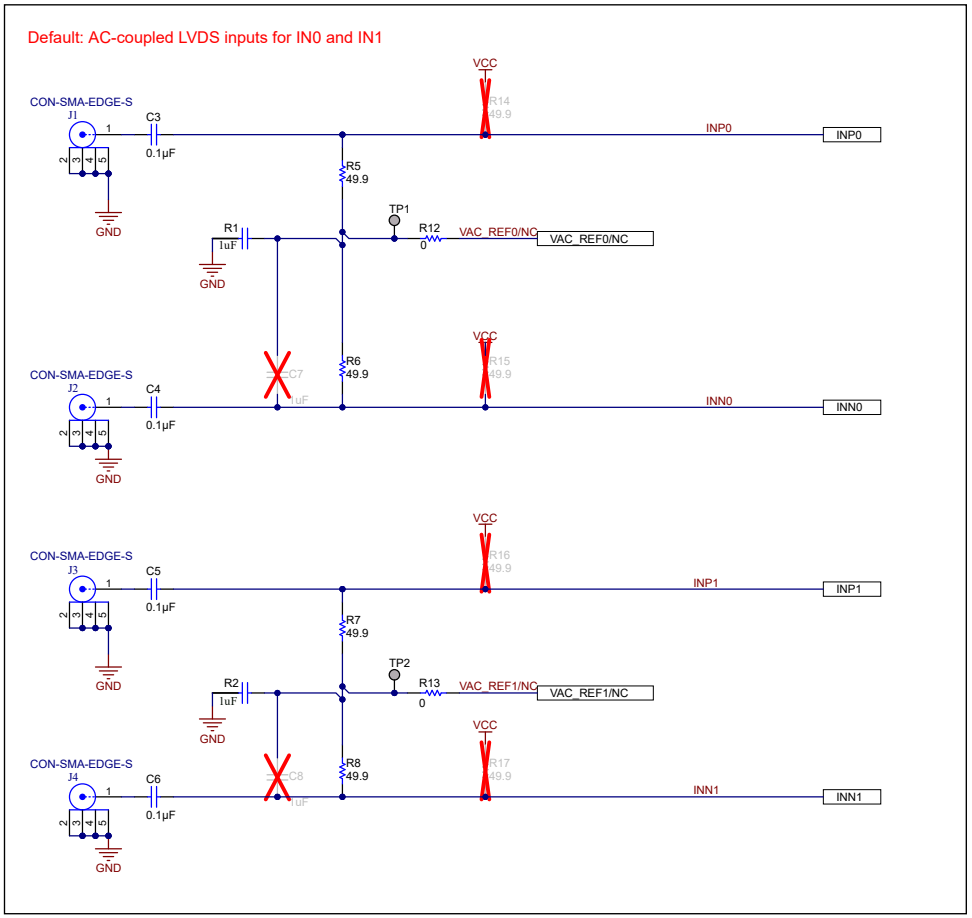

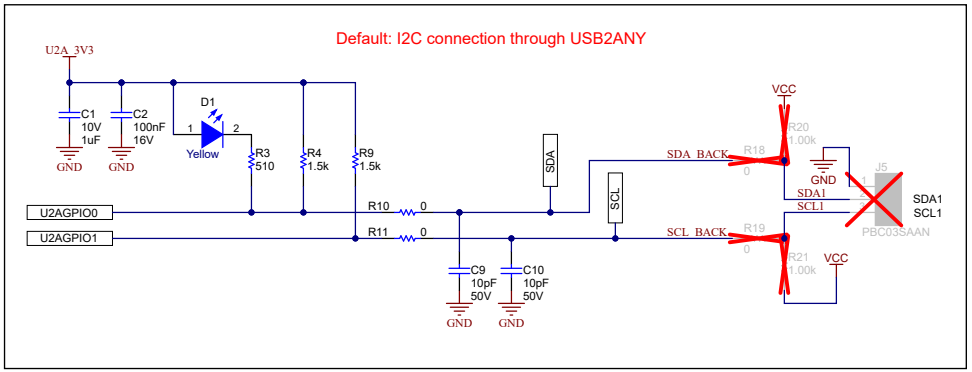

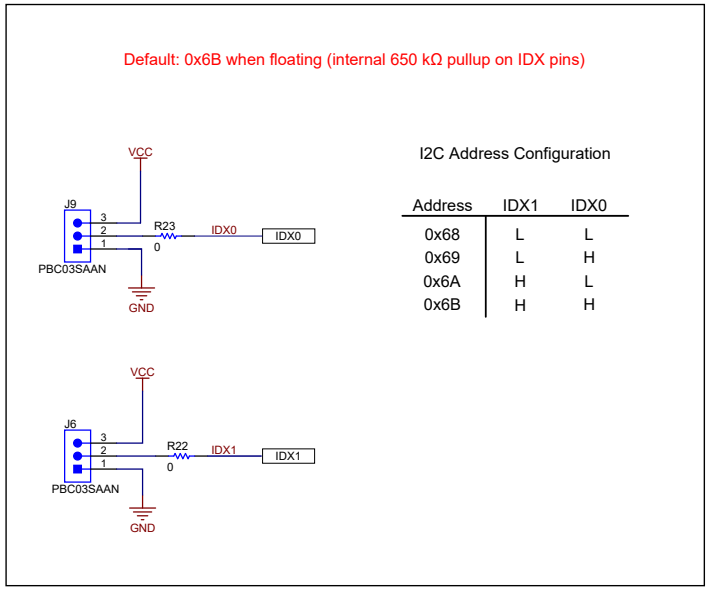

Figure 9-2. LMK1D1208IEVM Schematic: Inputs Sheet

Copyright © 2022 Texas Instruments Incorporated

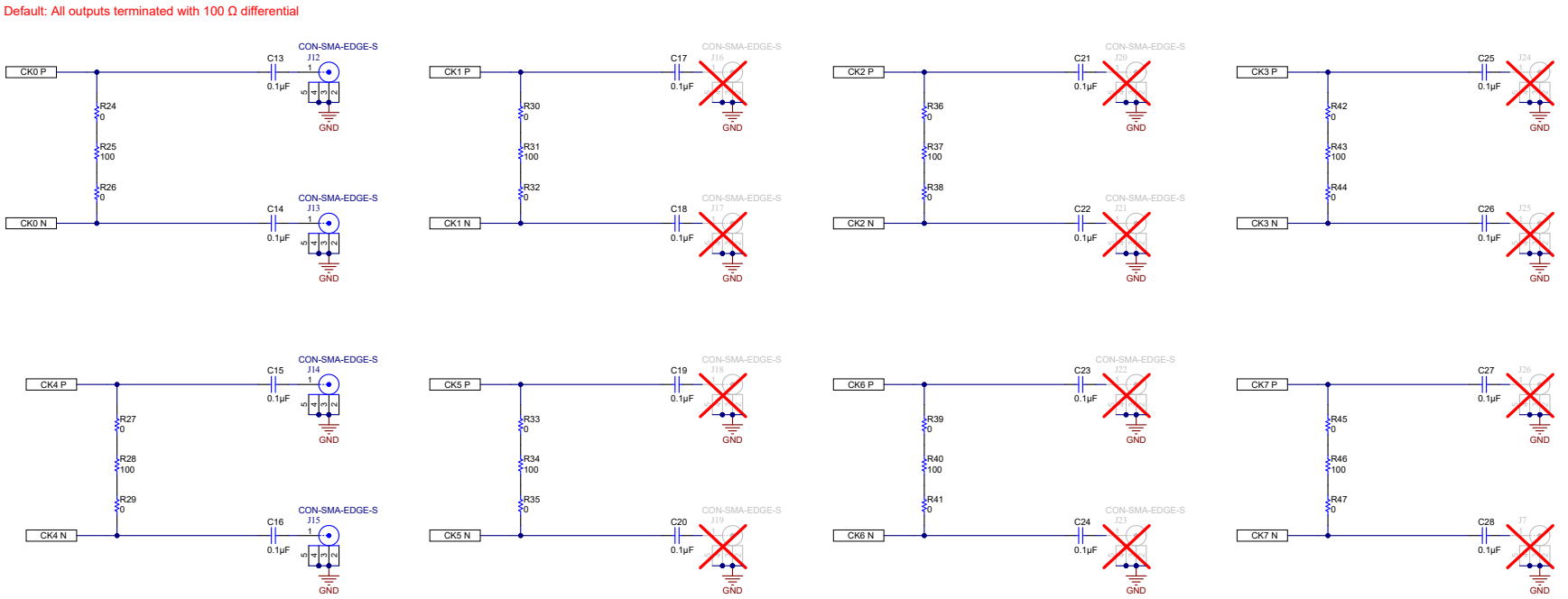

Figure 9-3. LMK1D1208IEVM Schematic: Outputs Sheet

Copyright © 2022 Texas Instruments Incorporated

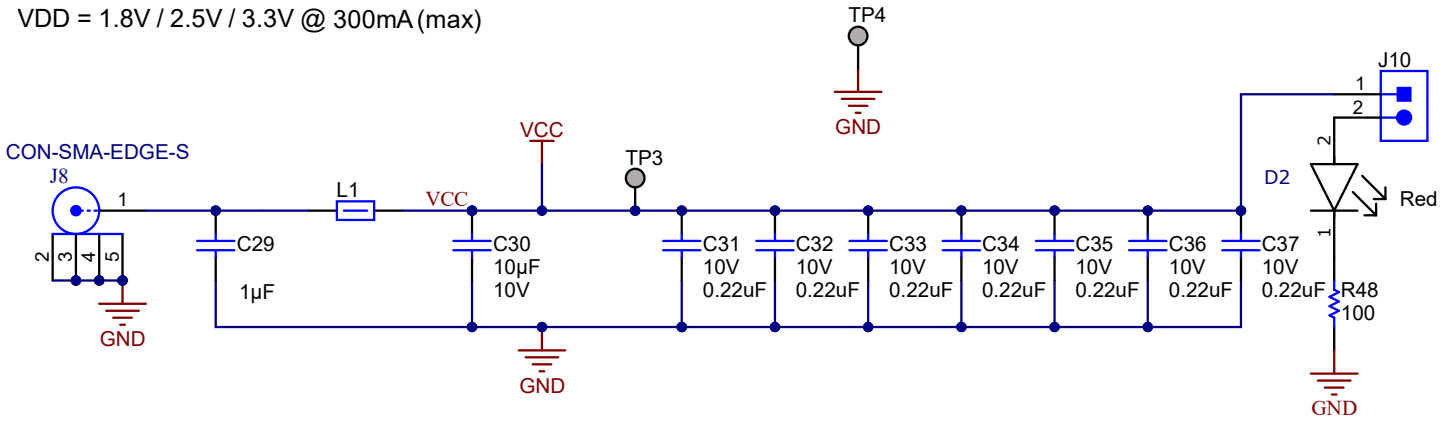

Figure 9-4. LMK1D1208IEVM Schematic: Power Supply Sheet

Copyright © 2022 Texas Instruments Incorporated

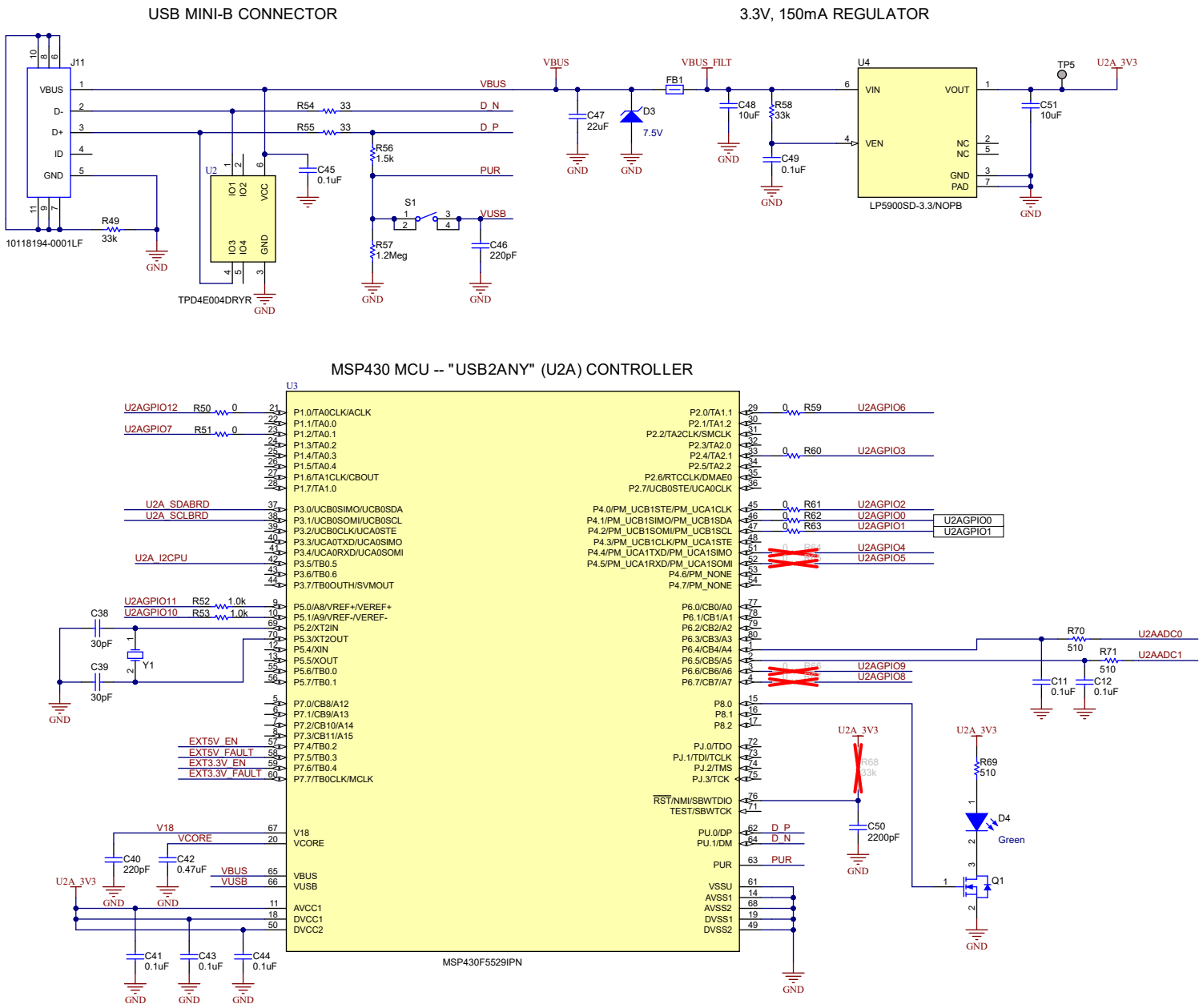

Figure 9-5. LMK1D1208IEVM Schematic: USB Sheet

Copyright © 2022 Texas Instruments Incorporated

10 Bill of Materials

Table 10-1. Bill of Materials

Quantity	Value	Designator	Description	Package Reference	Part Number	Manufacturer
1	1uF	C1	CAP, CERM, 1 uF, 10 V, +/- 10%, X5R, 0603	0603	C0603C105K8PACTU	Kemet
8	0.1uF	C2, C11, C12, C41, C43, C44, C45, C49	CAP, CERM, 0.1 uF, 16 V, +/- 5%, X7R, 0603	0603	C0603C104J4RACTU	Kemet
20	0.1uF	C3, C4, C5, C6, C13, C14, C15, C16, C17, C18, C19, C20, C21, C22, C23, C24, C25, C26, C27, C28	CAP, CERM, 0.1 µF, 10 V,+/- 10%, X7R, AEC-Q200 Grade 1, 0402	0402	C0402C104K8RACAUTO	Kemet
2	10pF	C9, C10	CAP, CERM, 10 pF, 50 V, +/- 5%, C0G/NP0, 0603	0603	C0603C100J5GACTU	Kemet
1	1uF	C29	CAP, CERM, 1 µF, 10 V,+/- 5%, X7R, AEC-Q200 Grade 1, 0603	0603	C0603X105J8RAC7867	Kemet
1	10uF	C30	CAP, CERM, 10 µF, 10 V,+/- 5%, X7R, AEC-Q200 Grade 1, 0805	0805	C0805C106J8RACAUTO	Kemet
7	0.22uF	C31, C32, C33, C34, C35, C36, C37	CAP, CERM, 0.22 uF, 10 V, +/- 10%, X7R, 0402	0402	GRM155R71A224KE01D	MuRata
2	30pF	C38, C39	CAP, CERM, 30 pF, 100 V, +/- 5%, C0G/NP0, 0603	0603	GRM1885C2A300JA01D	MuRata
2	220pF	C40, C46	CAP, CERM, 220 pF, 50 V, +/- 1%, C0G/NP0, 0603	0603	06035A221FAT2A	AVX
1	0.47uF	C42	CAP, CERM, 0.47 uF, 10 V, +/- 10%, X7R, 0603	0603	GRM188R71A474KA61D	MuRata
1	22uF	C47	CAP, CERM, 22 uF, 10 V, +/- 20%, X5R, 0805	0805	LMK212BJ226MG-T	Taiyo Yuden
2	10uF	C48, C51	CAP, CERM, 10 uF, 10 V, +/- 20%, X5R, 0603	0603	C1608X5R1A106M080AC	TDK
1	2200pF	C50	CAP, CERM, 2200 pF, 50 V, +/- 10%, X7R, 0603	0603	C0603C222K5RACTU	Kemet
1	Yellow	D1	LED, Yellow , SMD	0805 LED	LTST-C170KSKT	Lite-On
1		D2	SMD RED LED	SMD_LED	BOS-3528-2RCQ	BYD
1	7.5V	D3	Diode, Zener, 7.5 V, 550 mW, SMB	SMB	1SMB5922BT3G	ON Semiconductor
1	Green	D4	LED, Green, SMD	1.6x0.8x0.8mm	LTST-C190GKT	Lite-On

Copyright © 2022 Texas Instruments Incorporated

Table 10-1. Bill of Materials (continued)

Quantity	Value	Designator	Description	Package Reference	Part Number	Manufacturer
1	60 ohm	FB1	Ferrite Bead, 60 ohm @ 100 MHz, 3.5 A, 0603	0603	MPZ1608S600ATAH0	TDK
4		H1, H2, H3, H4	Machine Screw, Round, #4-40 x 1/4, Nylon, Philips panhead	Screw	NY PMS 440 0025 PH	B&F Fastener Supply
4		H5, H6, H7, H8	Standoff, Hex, 0.5"L #4-40 Nylon	Standoff	1902C	Keystone
9		J1, J2, J3, J4, J8, J12, J13, J14, J15	CONN SMA JACK STR EDGE MNT	CONN_JACK	CON-SMA-EDGE-S	RF Solutions Ltd.
2		J6, J9	Header, 100mil, 3x1, Gold, TH	PBC03SAAN	PBC03SAAN	Sullins Connector Solutions
1		J10	Header, 100mil, 2x1, Gold, TH	Header, 2x1, 100mil	5-146261-1	TE Connectivity
1		J11	Receptacle, USB 2.0, Micro-USB Type B, R/A, SMT	USB-micro B USB 2.0, 0.65mm, 5 Pos, R/A, SMT	10118194-0001LF	FCI
1	50 ohm	L1	Ferrite Bead, 50 ohm @ 100 MHz, 12 A, 1206	1206	BLM31SN500SZ1L	MuRata
1	50V	Q1	MOSFET, N-CH, 50 V, 0.22 A, SOT-23	SOT-23	BSS138	Fairchild Semiconductor
2	1uF	R1, R2	CAP, CERM, 1 uF, 6.3 V,+/- 10%, X7R, 0402	0402	GRM155R70J105KA12D	MuRata
1	510	R3	RES, 510, 5%, 0.1 W, 0603	0603	RC0603JR-07510RL	Yageo
2	1.5k	R4, R9	RES, 1.5 k, 5%, 0.1 W, 0603	0603	RC0603JR-071K5L	Yageo
4	49.9	R5, R6, R7, R8	RES, 49.9, 1%, 0.1 W, AEC-Q200 Grade 0, 0402	0402	ERJ-2RKF49R9X	Panasonic
4	0	R10, R11, R12, R13	RES, 0, 5%, 0.063 W, AEC-Q200 Grade 0, 0402	0402	CRCW04020000Z0ED	Vishay-Dale
2	0	R22, R23	RES, 0, 5%, 0.1 W, 0603	0603	RC0603JR-070RL	Yageo
16	0	R24, R26, R27, R29, R30, R32, R33, R35, R36, R38, R39, R41, R42, R44, R45, R47	RES, 0, 5%, 0.1 W, AEC-Q200 Grade 0, 0402	0402	ERJ-2GE0R00X	Panasonic
8	100	R25, R28, R31, R34, R37, R40, R43, R46	RES, 100, 0.1%, 0.1 W, AEC-Q200 Grade 0, 0402	0402	MCS0402MD1000BE100	Vishay/Beyschlag
1	100	R48	RES, 100, 1%, 0.1 W, AEC-Q200 Grade 0, 0603	0603	CRCW0603100RFKEA	Vishay-Dale
2	33k	R49, R58	RES, 33 k, 5%, 0.1 W, AEC-Q200 Grade 0, 0603	0603	CRCW060333K0JNEA	Vishay-Dale

Copyright © 2022 Texas Instruments Incorporated

Table 10-1. Bill of Materials (continued)

Quantity	Value	Designator	Description	Package Reference	Part Number	Manufacturer
7	0	R50, R51, R59, R60, R61, R62, R63	RES, 0, 5%, 0.1 W, AEC-Q200 Grade 0, 0603	0603	CRCW06030000Z0EA	Vishay-Dale
2	1.0k	R52, R53	RES, 1.0 k, 5%, 0.1 W, AEC-Q200 Grade 0, 0603	0603	CRCW06031K00JNEA	Vishay-Dale
2	33	R54, R55	RES, 33, 5%, 0.063 W, AEC-Q200 Grade 0, 0402	0402	CRCW040233R0JNED	Vishay-Dale
1	1.5k	R56	RES, 1.5 k, 5%, 0.063 W, AEC-Q200 Grade 0, 0402	0402	CRCW04021K50JNED	Vishay-Dale
1	1.2Meg	R57	RES, 1.2 M, 5%, 0.1 W, AEC-Q200 Grade 0, 0603	0603	CRCW06031M20JNEA	Vishay-Dale
3	510	R69, R70, R71	RES, 510, 5%, 0.1 W, AEC-Q200 Grade 0, 0603	0603	CRCW0603510RJNEA	Vishay-Dale
1		S1	Switch, Tactile, SPST-NO, 0.05A, 12V, SMT	SW, SPST 6x6 mm	FSM4JSMA	TE Connectivity
2	1x2	SH1, SH2	Shunt, 100mil, Gold plated, Black	Shunt	SNT-100-BK-G	Samtec
5		TP1, TP2, TP3, TP4, TP5	Test Point, Miniature, SMT	Test Point, Miniature, SMT	5019	Keystone
1		U1	LMK1D1208IRHA	VQFN40	LMK1D1208IRHA	Texas Instruments
1		U2	4-Channel ESD Protection Array for High-Speed Data Interfaces, DRY0006A (USON-6)	DRY0006A	TPD4E004DRYR	Texas Instruments
1		U3	25 MHz Mixed Signal Microcontroller with 128 KB Flash, 8192 B SRAM and 63 GPIOs, -40 to 85 degC, 80-pin QFP (PN), Green (RoHS & no Sb/Br)	PN0080A	MSP430F5529IPN	Texas Instruments
1		U4	150-mA Ultra-Low Noise LDO for RF and Analog Circuits Requires No Bypass Capacitor, NGF0006A (WSON-6)	NGF0006A	LP5900SD-3.3/NOPB	Texas Instruments
1		Y1	Crystal, 24.000 MHz, 20pF, SMD	Crystal, 11.4x4.3x3.8mm	ECS-240-20-5PX-TR	ECS Inc.
0	1uF	C7, C8	CAP, CERM, 1 uF, 6.3 V, +/- 20%, X7R, 0402	0402	GRM155R70J105MA12D	MuRata
0		FID1, FID2, FID3, FID4, FID5, FID6	Fiducial mark. There is nothing to buy or mount.	N/A	N/A	N/A
0		J5	Header, 100mil, 3x1, Gold, TH	PBC03SAAN	PBC03SAAN	Sullins Connector Solutions

Copyright © 2022 Texas Instruments Incorporated

Table 10-1. Bill of Materials (continued)

Quantity	Value	Designator	Description	Package Reference	Part Number	Manufacturer
0		J7, J16, J17, J18, J19, J20, J21, J22, J23, J24, J25, J26	CONN SMA JACK STR EDGE MNT	CONN_JACK	CON-SMA-EDGE-S	RF Solutions Ltd.
0	49.9	R14, R15, R16, R17	RES, 49.9, 1%, 0.1 W, AEC-Q200 Grade 0, 0402	0402	ERJ-2RKF49R9X	Panasonic
0	0	R18, R19	RES, 0, 5%, 0.1 W, 0603	0603	RC0603JR-070RL	Yageo
0	1.00k	R20, R21	RES, 1.00 k, 1%, 0.1 W, 0603	0603	ERJ-3EKF1001V	Panasonic
0	0	R64, R65, R66, R67	RES, 0, 5%, 0.1 W, AEC-Q200 Grade 0, 0603	0603	CRCW06030000Z0EA	Vishay-Dale
0	33k	R68	RES, 33 k, 5%, 0.1 W, AEC-Q200 Grade 0, 0603	0603	CRCW060333K0JNEA	Vishay-Dale

Copyright © 2022 Texas Instruments Incorporated

11 REACH Compliance

REACH Compliance

In compliance with the Article 33 provision of the EU REACH regulation we are notifying you that this EVM includes component(s) containing at least one Substance of Very High Concern (SVHC) above 0.1%. These uses from Texas Instruments do not exceed 1 ton per year. The SVHC's are:

Component Manufacturer	Component type	Component part number	SVHC Substance	SVHC CAS (when available)
Molex	5.08 Pitch Eurostyle Vertical Fixed Mount PCB Terminal Block, 2 Circuits	039544-3002	Lead	7439-92-1

Copyright © 2022 Texas Instruments Incorporated

IMPORTANT NOTICE AND DISCLAIMER

TI PROVIDES TECHNICAL AND RELIABILITY DATA (INCLUDING DATA SHEETS), DESIGN RESOURCES (INCLUDING REFERENCE DESIGNS), APPLICATION OR OTHER DESIGN ADVICE, WEB TOOLS, SAFETY INFORMATION, AND OTHER RESOURCES “AS IS” AND WITH ALL FAULTS, AND DISCLAIMS ALL WARRANTIES, EXPRESS AND IMPLIED, INCLUDING WITHOUT LIMITATION ANY IMPLIED WARRANTIES OF MERCHANTABILITY, FITNESS FOR A PARTICULAR PURPOSE OR NON-INFRINGEMENT OF THIRD PARTY INTELLECTUAL PROPERTY RIGHTS.

These resources are intended for skilled developers designing with TI products. You are solely responsible for (1) selecting the appropriate TI products for your application, (2) designing, validating and testing your application, and (3) ensuring your application meets applicable standards, and any other safety, security, regulatory or other requirements.

These resources are subject to change without notice. TI grants you permission to use these resources only for development of an application that uses the TI products described in the resource. Other reproduction and display of these resources is prohibited. No license is granted to any other TI intellectual property right or to any third party intellectual property right. TI disclaims responsibility for, and you will fully indemnify TI and its representatives against, any claims, damages, costs, losses, and liabilities arising out of your use of these resources.

TI’s products are provided subject to TI’s Terms of Sale or other applicable terms available either on ti.com or provided in conjunction with such TI products. TI’s provision of these resources does not expand or otherwise alter TI’s applicable warranties or warranty disclaimers for TI products.

TI objects to and rejects any additional or different terms you may have proposed.

Mailing Address: Texas Instruments, Post Office Box 655303, Dallas, Texas 75265
Copyright © 2022, Texas Instruments Incorporated

Unikeyic Electronics

Global Electronic Components Distributor

Click to view pricing, inventory, delivery, and lifecycle information:

Texas Instruments:

RI-I02-114B-01 LM311PW LM5110-2M/NOPB OPA2330AIDRBT THMC50DBQR TPS3307-25DGNR TVP5150AM1PBSR LM4050CEM3-5.0 SN74ALS257AD MSP430F5438AIPZR TL750L12CP TPA005D14DCA TPS2835PWPR UCC3752D DRV8821DCA OPA643P SN74ALVC244PWE4 TL074IDR BQ25616RTWR INA228AIDGSR SN74ACT3631-15PQ SN74ACT7807-20FN TPS25200DRVR TPS3809I50DBVR ISO124U/1K SN74ALS258ADR SN74AS1034ANSR SN74ALS1640AN SN74AS832BDW TLV2451IDBVR