ALCOSWITCH PUSHBUTTON 22 mm EMERGENCY STOP SWITCH

ILLUMINATED AND NON-ILLUMINATED

INTRODUCTION

TE Connectivity (TE)'s ALCOSWITCH PBES22 series pushbutton emergency stop switch is offered in illuminated or non-illuminated styles. When mounted, the switch offers IP65 protection on the front of the panel. Easy to terminate screw terminals allow fast termination.

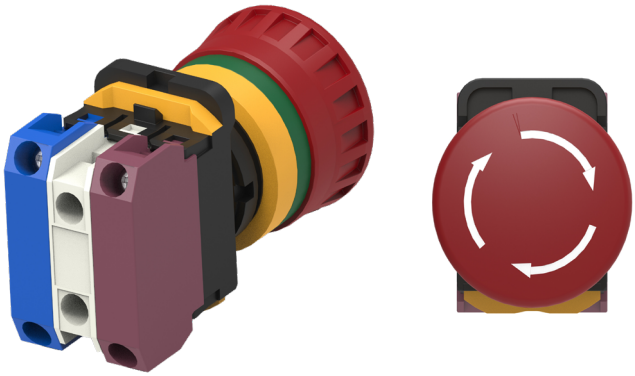

2416049
AVAILABLE WITH OR WITHOUT ILLUMINATION

FEATURES

- IP65 rated front of panel
- IEC 60947-5-1 & IEC 60947-5-5
- Ø22.3 mm and Ø25.5 mm mounting hole options
- Simple and easy mounting
- Blocks and sockets with screw terminals
- Silver plating
- Illuminated and non-illuminated styles
- LED & incandescent
- High actuation force

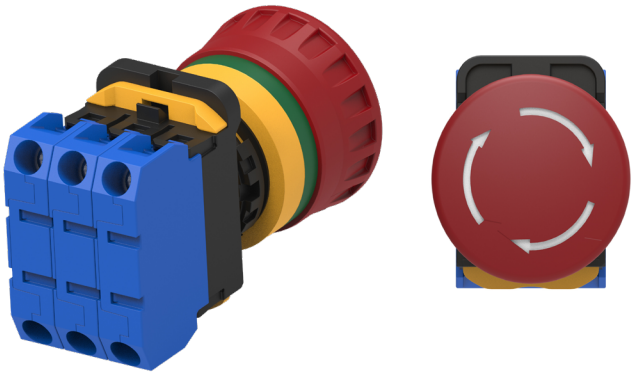

2416050
AVAILABLE WITHOUT ILLUMINATION

APPROVALS

- UL, CE, TUV & UKCA agency approval

ALCOSWITCH Pushbutton 22 mm Emergency Stop Switch

Illuminated and Non-Illuminated

PRODUCT SPECIFICATION

Mechanical life	>100,000 Operations
Electrical life	>100,000 Operations
Motion tolerance	< 20 Operations/minute (mechanical and electrical life)
Degree of protection	Panel front: IP65 (IEC 60529) Contact block: IP20 (IEC 60529)
Panel thickness	0.8 mm to 6.0 mm (without anti-rotation ring or nameplate) 1.2 mm to 4.5 mm (with anti-rotation ring or nameplate)
Mounting ring torque	2 N-m
Maximum insulation voltage	2500 VAC @ 50/60 Hz, 10 mA, 1 minute
Insulation resistance	100 MΩ @ 500 VDC, 100 mA, 1 minute
Storage temperature	-40 °C to +70 °C
Operating temperature	-25 °C to +70 °C (Without lamp) -25 °C to +55 °C (With lamp)
Contact resistance	<= 100 mΩ, 1A, 6 to 8 VDC
Operating forces	Push - lock : 20 N to 30 N, Pull - reset : less than 50 N, Turn – reset: less than 1 N-m
Operating travel	Push – lock 8±2 mm, Pull - reset : 4.6±1 mm Turn – reset CW 20°
Pollution degree	3
Wire range	16 to 14 awg, 1.5 mm^2 to 2.5 mm^2
Min applicable load	3V AC/DC, 3 mA
Rated impulse withstanding voltage	2.5 kV
Conditional short-circuit current	1 kA
Screw size for terminal and lamp socket block	M3.5
Tightening torque for terminal and lamp socket block screw	0.8 N-m

ELECTRICAL RATINGS

TUV (IEC 60947-5-5)				
Rated insulation voltage (Ui)	600 V			
Conventional enclosed thermal current (I_{the})	10 A			
Rated operational voltage (Ue)	24 V	120 V	240 V	380 V
Utilization category	Rated operational current (Ie)			
AC-15	10 A	6 A	3 A	2 A
AC-12	10 A	10 A	6 A	2 A
DC-13	4 A	4 A	1 A	--
DC-12	8 A	8 A	2 A	--

UL (UL 508, CNL 508)					
Load Type	Operating Voltage	24 V	120 V	240 V	380 V
General Purpose	AC (50/60 Hz)	10 A	10 A	6 A	2 A
	DC	8 A	2.2 A	1.1 A	-
Resistive	AC (50/60 Hz)	10 A	10 A	6 A	2 A
	DC	8 A	2.2 A	1.1 A	-
Pilot Duty	A600				

SWITCH STYLES

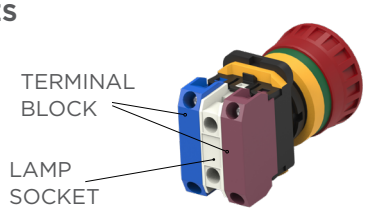

2416049

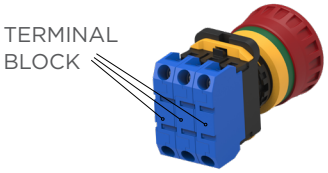

2416050

SUB-ASSEMBLIES AND COMPONENETS IDENTIFICATION

ACTUATOR SUB-ASSEMBLY

ILLUMINATED - 2416049

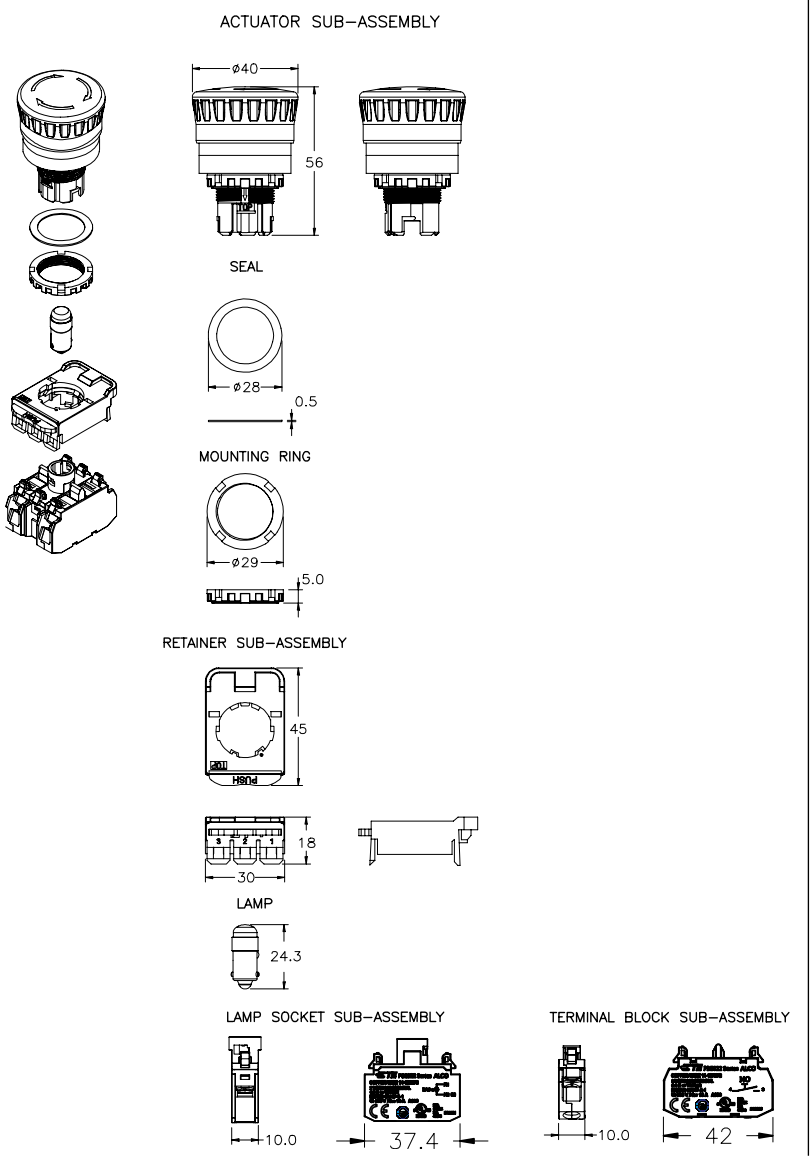

NON-ILLUMINATED - 2416050

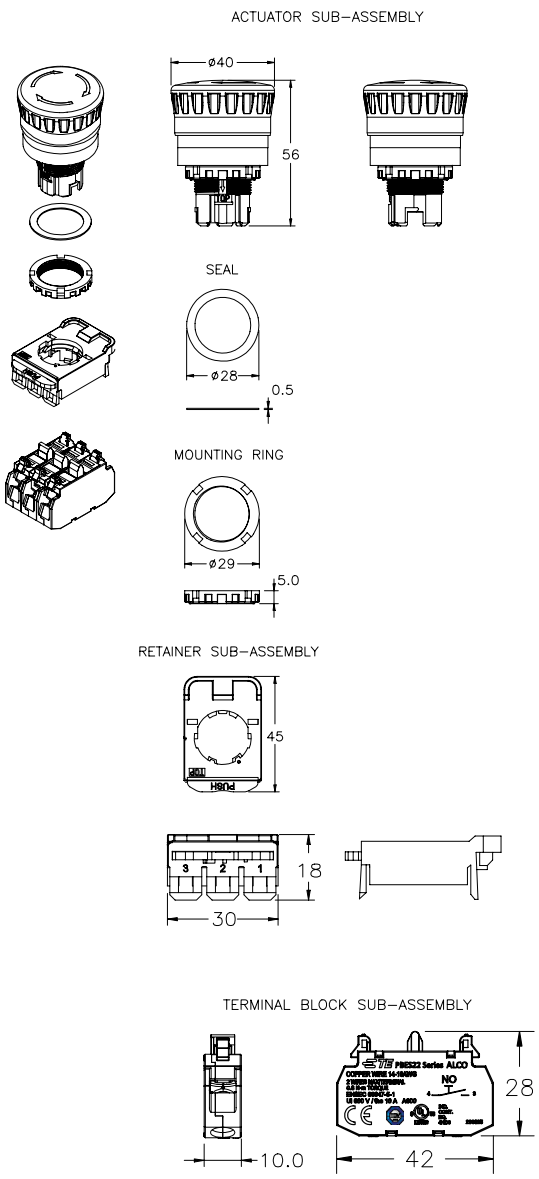

ALCOSWITCH Pushbutton 22 mm Emergency Stop Switch

Illuminated and Non-Illuminated

2416049

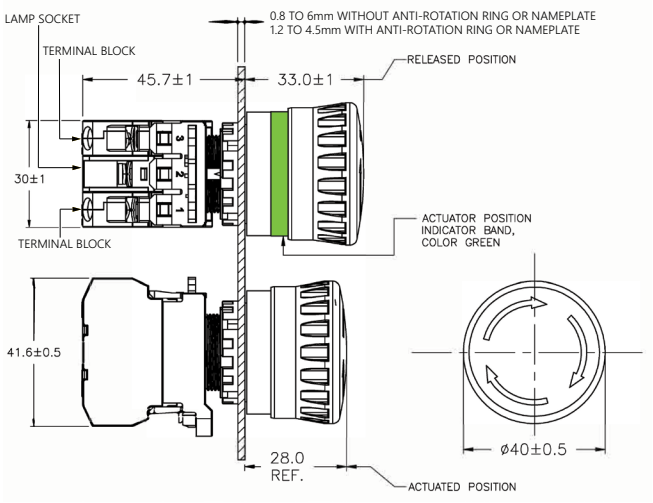

2416050

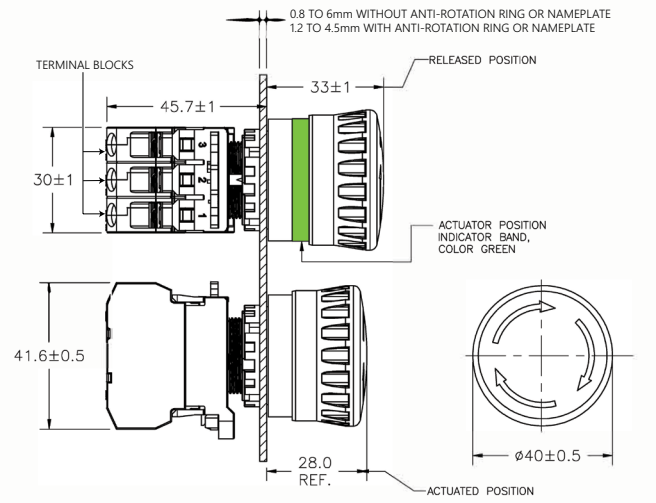

TERMINAL BLOCKS

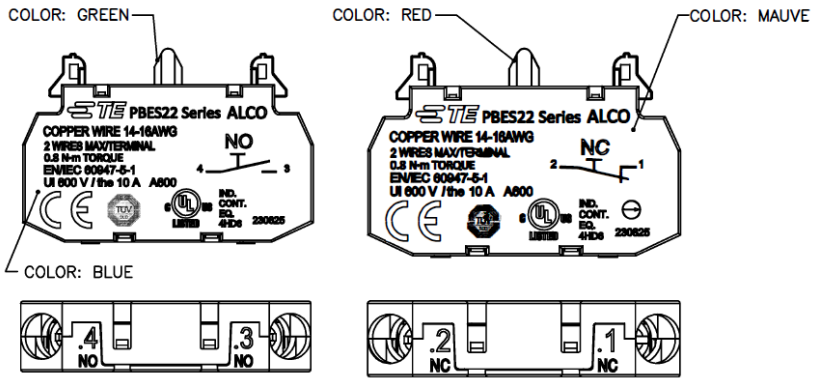

FUNCTION:
NO=NORMALLY OPEN

FUNCTION:
NC=NORMALLY CLOSED

LAMP SOCKET

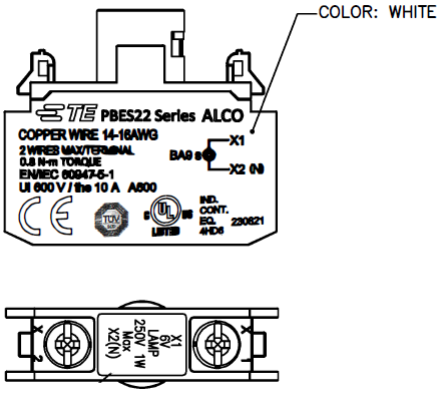

ACCESSORIES



Name Plate



Anti Rotation Ring



Assembly Tool

TE Part Number	Description
2461019-1	Name Plate
2461020-1	Anti Rotation Ring
2461021-1	Assembly Tool

DISASSEMBLY OF THE TERMINAL BLOCKS AND LAMP SOCKET RETAINER SUB-ASSEMBLY FROM THE ACTUATOR SUB-ASSEMBLY (PRIOR TO MOUNTING PANEL)

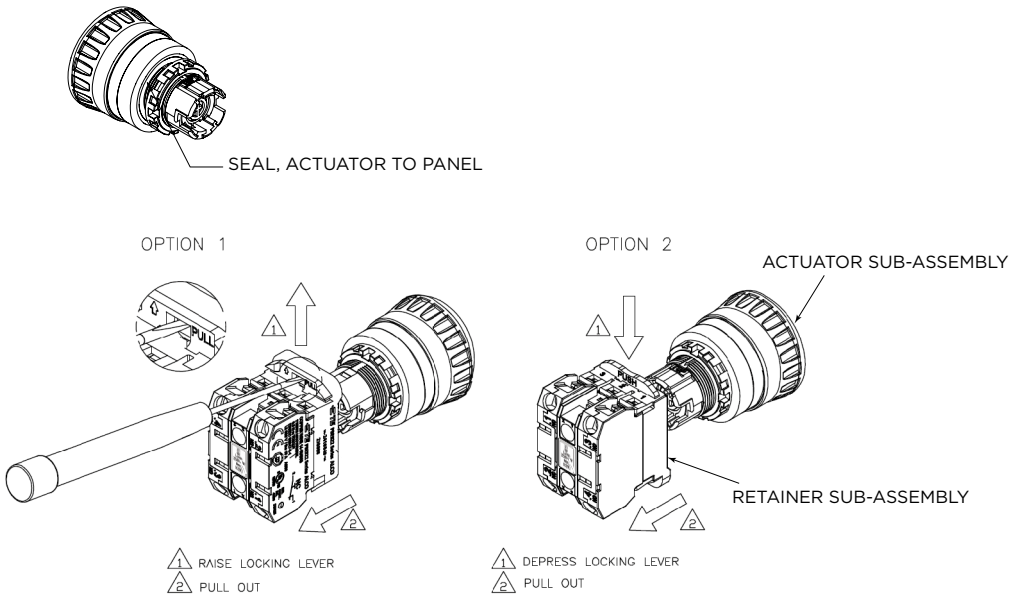

MOUNTING HOLE CONFIGURATIONS

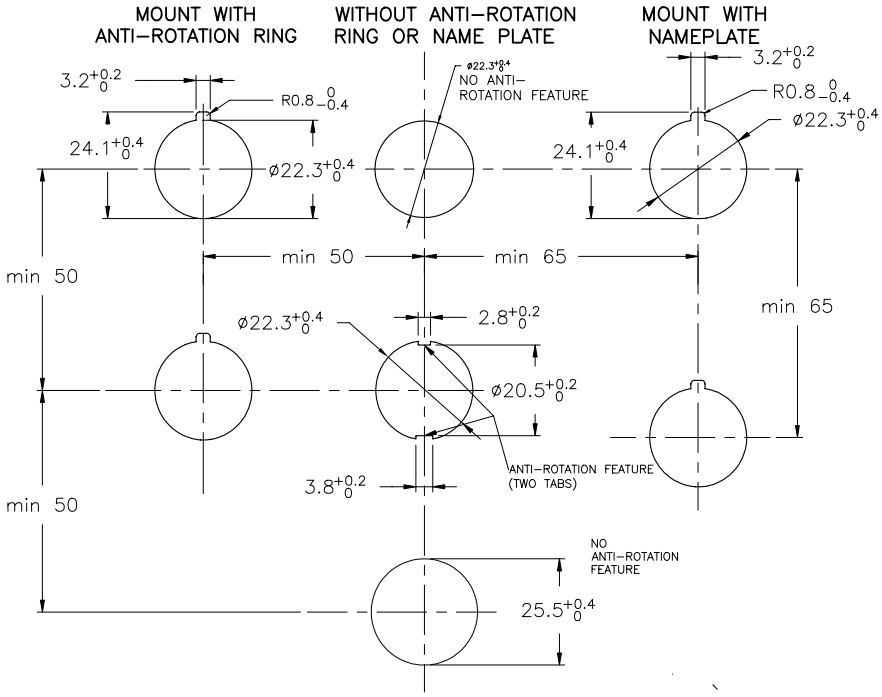

Notes:

1. Dimensions in millimetres unless otherwise specified.
2. Dimensions shown for reference purposes only. Specifications subject to change.

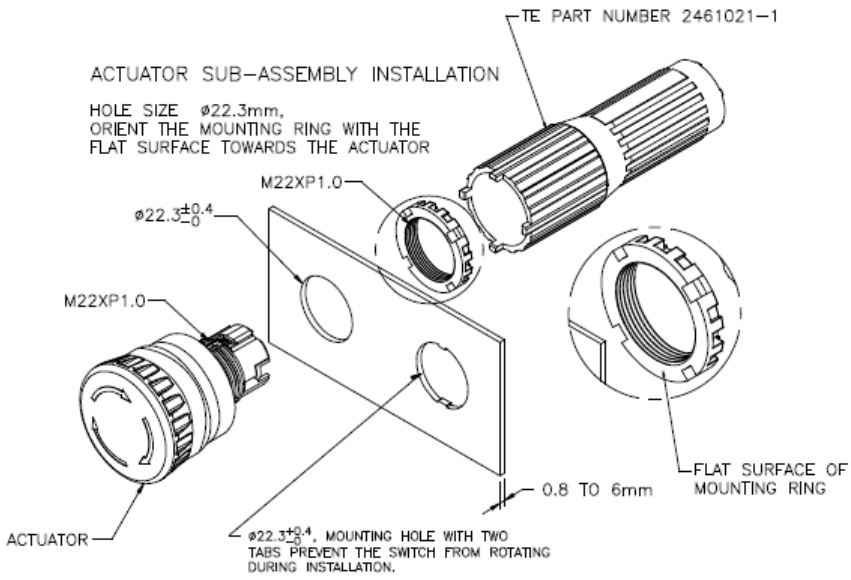

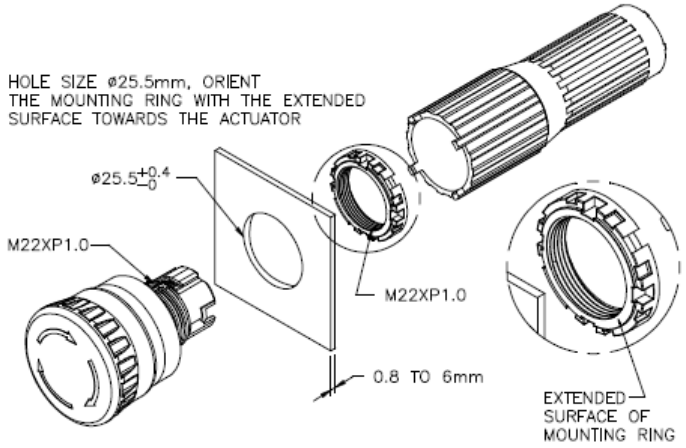

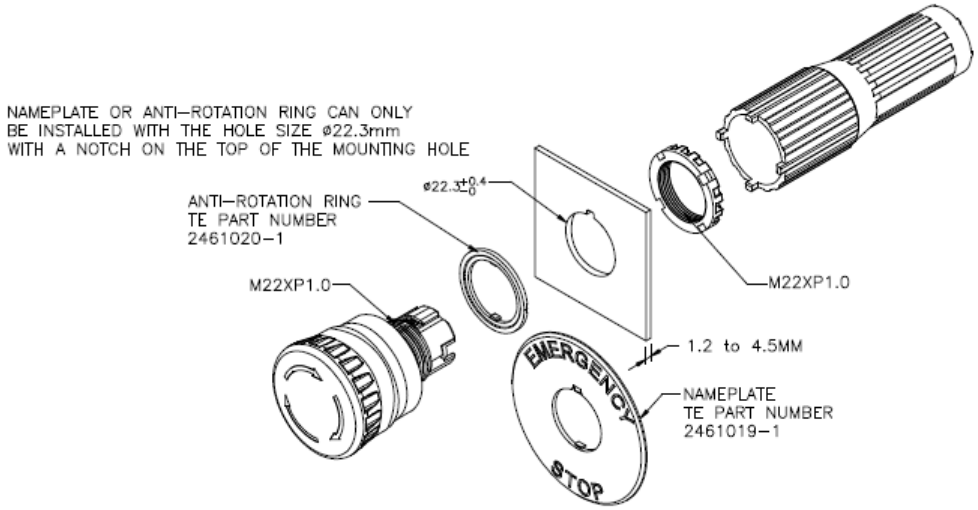

Notes:

1. Dimensions in millimetres unless otherwise specified.
2. Dimensions shown for reference purposes only. Specifications subject to change.

ASSEMBLY OF THE TERMINAL BLOCKS
AND LAMP SOCKET RETAINER SUB–ASSEMBLY
TO THE ACTUATOR SUB–ASSEMBLY

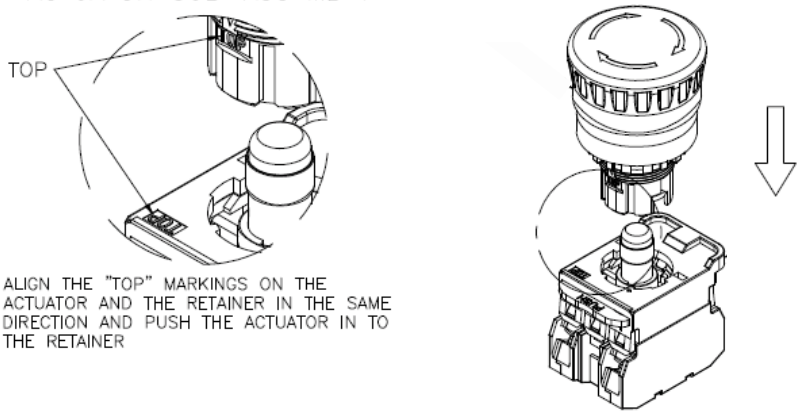

ALIGN THE "TOP" MARKINGS ON THE ACTUATOR AND THE RETAINER IN THE SAME DIRECTION AND PUSH THE ACTUATOR IN TO THE RETAINER

LAMP SOCKET

WIRING GUIDE

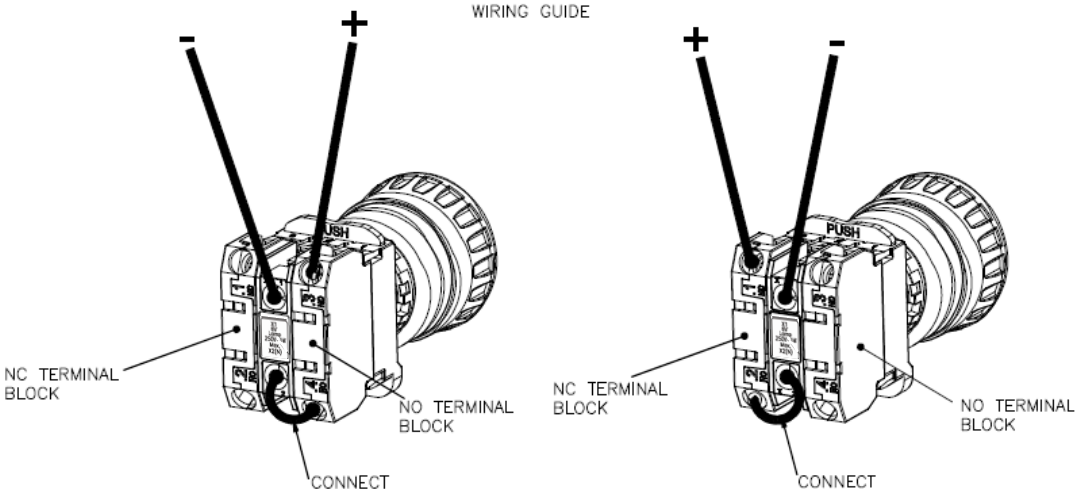

WHEN ACTUATED, LAMP WILL TURNED ON.

WHEN ACTUATED, LAMP WILL TURNED OFF.

ALCOSWITCH Pushbutton 22 mm Emergency Stop Switch

Illuminated and Non-Illuminated

ORDERING INFORMATION

Illuminated

TE Smart Part Number
PBES22 _ _ _ _

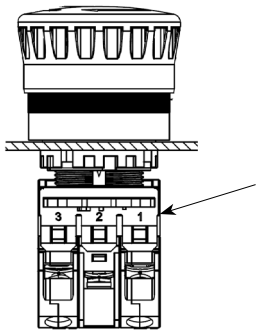

Model No

PBES22

L	Lamp Available

Switch Function

Retainer Cavity			
	1	**2**	**3**
01	n/a	Lamp Socket	NC
02	NC		NC
10	NO		n/a
11	NO		NC
20	NO		NO

n/a = Cavity is not populated with a terminal block

Button Color

R	Red

Lamp Options

0	No Lamp
2	6V AC/DC 11mA LED
3	12V AC/DC 10mA LED
4	24V AC/DC 10mA LED
5	6V AC/DC 6.3V 1W Incandescent
6	12V AC/DC 18V 1W Incandescent
7	24V AC/DC 30V 1W Incandescent
H	110V AC/DC 1.4mA LED
M3	230/240V AC/DC 1.2mA LED

PART NUMBER LIST

TE Part Number	TE Smart Part Number
2416049-1	PBES22L010R
2416049-2	PBES22L012R
2416049-3	PBES22L013R
2416049-4	PBES22L014R
2416049-5	PBES22L015R
2416049-6	PBES22L016R
2416049-7	PBES22L017R
2416049-8	PBES22L01HR
2416049-9	PBES22L01M3R
1-2416049-0	PBES22L020R
1-2416049-1	PBES22L022R
1-2416049-2	PBES22L023R
1-2416049-3	PBES22L024R
1-2416049-4	PBES22L025R
1-2416049-5	PBES22L026R
1-2416049-6	PBES22L027R
1-2416049-7	PBES22L02HR
1-2416049-8	PBES22L02M3R

TE Part Number	TE Smart Part Number
1-2416049-9	PBES22L100R
2-2416049-0	PBES22L102R
2-2416049-1	PBES22L103R
2-2416049-2	PBES22L104R
2-2416049-3	PBES22L105R
2-2416049-4	PBES22L106R
2-2416049-5	PBES22L107R
2-2416049-6	PBES22L10HR
2-2416049-7	PBES22L10M3R
2-2416049-8	PBES22L110R
2-2416049-9	PBES22L112R
3-2416049-0	PBES22L113R
3-2416049-1	PBES22L114R
3-2416049-2	PBES22L115R
3-2416049-3	PBES22L116R
3-2416049-4	PBES22L117R
3-2416049-5	PBES22L11HR
3-2416049-6	PBES22L11M3R

TE Part Number	TE Smart Part Number
3-2416049-7	PBES22L200R
3-2416049-8	PBES22L202R
3-2416049-9	PBES22L203R
4-2416049-0	PBES22L204R
4-2416049-1	PBES22L205R
4-2416049-2	PBES22L206R
4-2416049-3	PBES22L207R
4-2416049-4	PBES22L20HR
4-2416049-5	PBES22L20M3R

ORDERING INFORMATION

Non-illuminated

TE Smart Part Number
PBES22 _ _ _

Model No

PBES22	

N	No Lamp

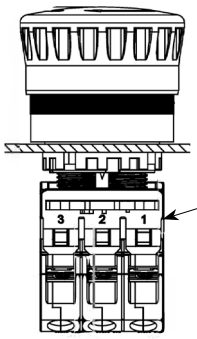

Cavity identification

Button Color

R	Red

Switch Function

	Retainer Cavity		
	1	**2**	**3**
01	n/a	n/a	NC
02	NC	n/a	NC
03	NC	NC	NC
10	NO	n/a	n/a
11	NO	n/a	NC
12	NO	NC	NC
20	NO	n/a	NO
21	NO	NO	NC
30	NO	NO	NO

PART NUMBER LIST

TE Part Number	TE Smart Part Number
2416050-1	PBES22N01R
2416050-2	PBES22N02R
2416050-3	PBES22N03R
2416050-4	PBES22N10R
2416050-5	PBES22N11R
2416050-6	PBES22N12R
2416050-7	PBES22N20R
2416050-8	PBES22N21R
2416050-9	PBES22N30R

n/a = Cavity is not populated with a terminal block

te.com

© 2024 TE Connectivity Ltd. family of companies. All Rights Reserved.

ALCOSWITCH, TE Connectivity, TE connectivity (logo) and Every Connection Counts are trademarks owned or licensed by the TE Connectivity family of companies. All other logos, products and/or company names referred to herein might be trademarks of their respective owners.

While TE has made every reasonable effort to ensure the accuracy of the information in this document, owned or licensed by the TE Connectivity family of companies. TE does not guarantee that it is error-free, nor does TE make any other representation, warranty or guarantee that the information is accurate, correct, reliable or current. TE reserves the right to make any changes to the information contained herein without prior notice. TE Connectivity assumes only those obligations set forth in the terms and conditions for this product and shall in no event be liable for any incidental, indirect, or consequential damages arising out of the sale, resale, use, or misapplication of the product. TE expressly disclaims any implied warranties with respect to the information contained herein, including, but not limited to, implied warranties of merchantability or fitness for a particular purpose. Dimensions, specifications and/or information contained herein are for reference purposes only and are subject to change without notice. Consult TE for the latest dimensions, specifications and/or information. Users of TE Connectivity products must make their own assessment as to whether the respective product is suitable for the respective desired application.

02/24 ED

Unikeyic Electronics

Global Electronic Components Distributor

Click to view pricing, inventory, delivery, and lifecycle information:

TE Connectivity:

2377783-2 1-794222-0 1MM-HU-D10-VS-00-F-TBP 292230-8 640174-1 936348-1 1-1743284-2 2-520103-2 917696-1 2-32562-2 352116RFT SMV3W5M6JT 917790-2 SMW73R0JT 1393431-1 281990-2 2834055-1 1488167-1 1743455-2 2-292161-3 2-520128-2 3430B2F51RTDF 650075-000 141991-2 1969656-1 3-1393225-0 35402K7FT 36161 CRGCQ0805F150R CRGCQ2010J3K3