Drawn cup needle roller bearings with open ends HK1516 (Series HK)

to DIN 618-1/ISO 3245

The datasheet is only an overview of dimensions and basic load ratings of the selected product. Please always observe all the guidelines in these overview pages. Further information is given on many products under the menu item "Description". You can also order comprehensive information via the Catalogue ordering system (http://www.ina.de/content.ina.de/en/mediathek/library/library.jsp) or by telephone on +49 (91 32) 82 - 28 97.

F_w	15	mm	
D	21	mm	
C	16	mm	Tolerance: 0/-0,3
r_{min}	0,8	mm	
m	15	g	Mass
C_r	10500	N	Basic dynamic load rating, radial
C_{0r}	14400	N	Basic static load rating, radial
C_{ur}	1780	N	Fatigue limit load, radial
n_G	16500	1/min	Limiting speed
n_B	12300	1/min	Reference speed
	LR12X15X16,5		Suitable inner ring
	IR12X15X16-XL		Suitable inner ring
	SD15X21X3		Suitable sealing ring
	G15X21X3		Suitable sealing ring

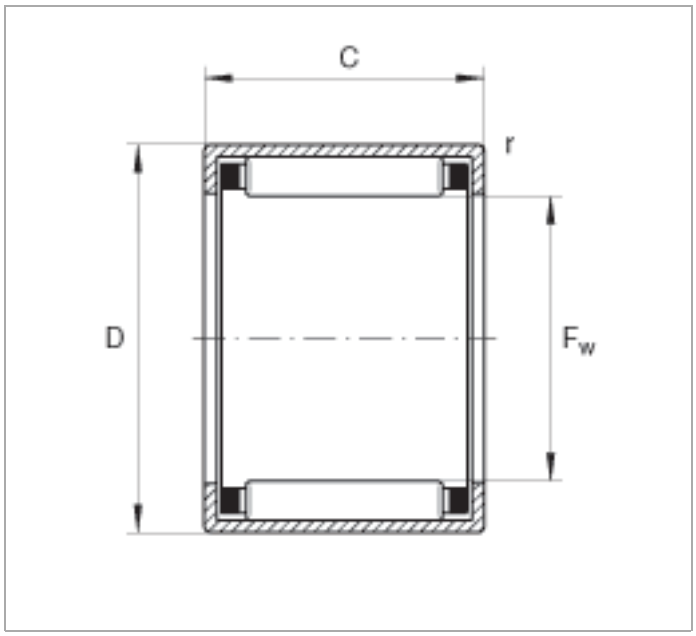
C
r
D
F_w

Unikeyic Electronics

Global Electronic Components Distributor

Click to view pricing, inventory, delivery, and lifecycle information:

INA:

KB16-PP-AS KRE52-PP-A NA4907-2RSR-XL GE40-UK-2RS-A LR203-X-2RSR NATV15-PP-A
GE40-FO-2RS HK20202RSL271 KB40-PP-AS KR5207-2RS PCJT40-XL-N RME60-XL-N#N1>1
GE50-DO-2RS GE50-UK-2RS-A GE6-UK KWVE25-B-V2-G3 NKIB5902-XL RCJY40-XL-N
IR17X22X14-IS1-OF-XL NUKR35-X-A GE35-DO-2RS KH10PP NA2200-2RSR RAE30-XL-NPP-FA106
TME50-XL-N NKIA59/22-XL NKXR30-XL PNA20/42-XL IR7X10X12-XL KH06-PP