

Optical reading head

PGV150I-F200A-B17-V1D

- Mechanically rugged: no wearing parts, long operating life, maintenance-free
- PROFINET interface
- Non-contact positioning on Data Matrix code tape
- Noncontact positioning with Data Matrix TAGs
- Reading of Data Matrix control codes
- Infrared light

Read head for incident light positioning system

Dimensions

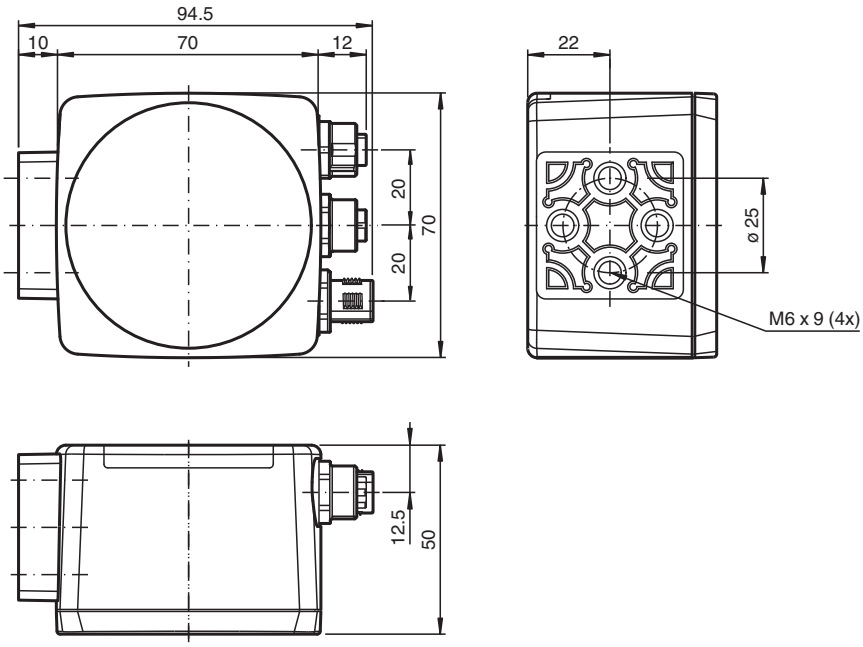

Technical Data

General specifications		
Passage speed	v	≤ 8 m/s
Measuring range		max. 10000 m
Light type		Integrated LED lightning , infrared
Scan rate		40 s^{-1}
Latency		50 ms
Read distance		150 mm
Depth of focus		± 30 mm
Reading field		170 mm x 105 mm
Ambient light limit		100000 Lux

Release date: 2024-08-07 Date of issue: 2024-08-07 Filename: 285693-100001_eng.pdf

Technical Data

Accuracy		± 0.2 mm
Nominal ratings		
Camera		
Type		CMOS , Global shutter
Processor		
Clock pulse frequency		600 MHz
Speed of computation		4800 MIPS
Digital resolution		32 Bit
Functional safety related parameters		
$MTTF_d$		82 a
Mission Time (T_M)		10 a
Diagnostic Coverage (DC)		0 %
Indicators/operating means		
LED indication		7 LEDs (communication, alignment aid, status information)
Electrical specifications		
Operating voltage	U_B	24 V DC ± 15% , PELV
No-load supply current	I_0	max. 400 mA
Power consumption	P_0	6 W
Interface		
Interface type		100 BASE-TX
Protocol		PROFINET IO Real-Time (RT) Conformance class A
Transfer rate		100 MBit/s
Interface 2		
Interface type		USB Service
Input		
Input type		1 funtion input 0-level: -$U_B$or unwired 1-level: +8 V ... +U_B , programmable
Input impedance		≥ 27 kΩ
Output		
Output type		1 to 3 switch outputs , PNP , programmable , short-circuit protected
Switching voltage		Operating voltage
Switching current		150 mA each output
Conformity		
Shock resistance		EN 60068-2-27:2009
Vibration resistance		EN 60068-2-6:2008
Emitted interference		EN 61000-6-4:2007+A1:2011
Noise immunity		EN 61000-6-2:2005
Photobiological safety		exempt group according to EN 62471:2008
Approvals and certificates		
CE conformity		CE
UL approval		cULus Listed, Class 2 Power Source, Type 1 enclosure
CCC approval		CCC approval / marking not required for products rated ≤36 V
Ambient conditions		
Operating temperature		0 ... 60 °C (32 ... 140 °F) , -20 ... 60 °C (-4 ... 140 °F) (noncondensing; prevent icing on the lens!)
Storage temperature		-20 ... 85 °C (-4 ... 185 °F)
Relative humidity		90 % , noncondensing
Mechanical specifications		
Connection type		8-pin, M12x1 connector, standard (supply+IO) 4-pin, M12x1 socket, D-coded (LAN) 4-pin, M12x1 socket, D-coded (LAN)
Degree of protection		IP67
Material		
Housing		PC/ABS

Release date: 2024-08-07 Date of issue: 2024-08-07 Filename: 285693-100001_eng.pdf

Technical Data

Mass		approx. 200 g
Dimensions		
Height		70 mm
Width		70 mm
Depth		50 mm
Factory settings		
X resolution (protocol)		0.1 mm
Y resolution (protocol)		0.1 mm
Speed resolution (protocol)		0.1 m/s
Angle resolution		0.1 °
Extrapolation		On

Connection

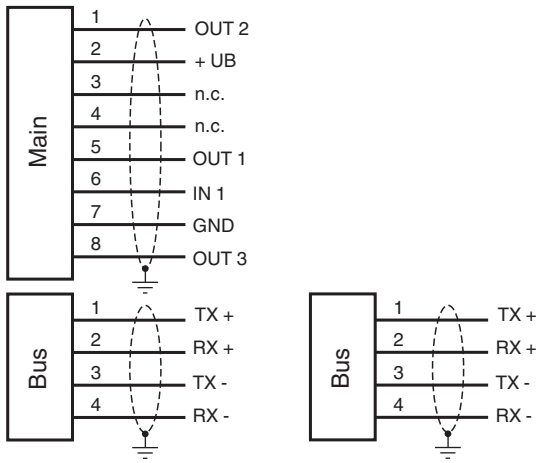

Connection Assignment

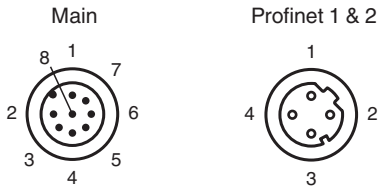

Function Principle

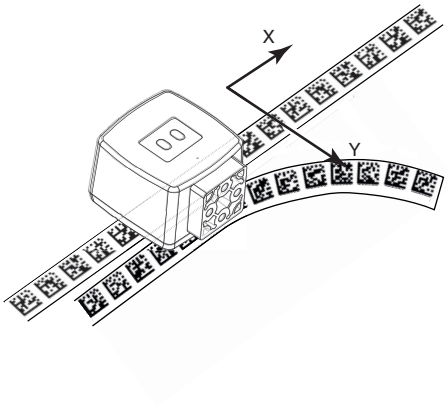

Release date: 2024-08-07 Date of issue: 2024-08-07 Filename: 285693-100001_eng.pdf

Function Principle

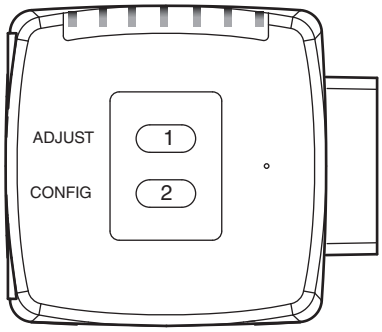

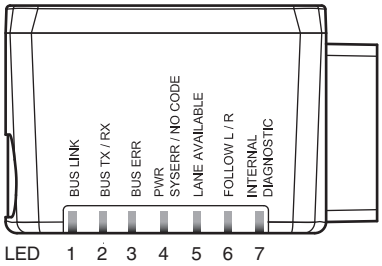

Release date: 2024-08-07 Date of issue: 2024-08-07 Filename: 285693-100001_eng.pdf