

Free Mount Cylinder

Series CU

Double Acting Single Rod/Double Rod
Single Acting Spring Return/Extend, Non-rotating Rod
ø6, ø10, ø16, ø20, ø25, ø32

A space saving air cylinder with multiple surfaces for mounting. The series consist of an array of cylinders.

Space savings

Having a square shape without a bracket, any of its surfaces can be used for mounting,thus enabling a space saving equipment layout.

Auto switch attachable

Mounting

Axial mounting (Body tapped)	Vertical mounting (Body through hole)	Lateral mounting (Body through hole)
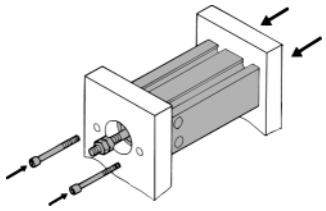	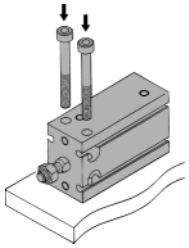	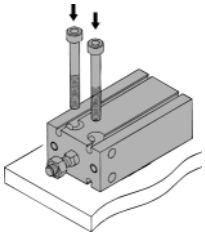

Variations

Series	Action	Rod	Basic	Standard variations: Built-in magnet	Standard variations: Copper free	Bore size (mm)	Page
Standard/Series CU 	Double acting	Single rod	●	●	●	6, 10, 16, 20, 25, 32	2.1-11
		Double rod	●	●	●		2.1-17
	Single acting	Single rod (Spring return/extend)	●	●	●		2.1-22
Non–rotating rod/ Series CUK 	Double acting	Single rod	●	●	●		2.1-31
		Double rod	●	●	●		2.1-35
	Single acting	Single rod (Spring return/extend)	●	●	●		2.1-39
Long Stroke Standard/Series CU 	Double acting	Single rod	●	●	●	6, 10, 16, 20, 25, 32	2.1-45
Long Stroke, Non-rotating rod/Series CUK 	Double acting	Single rod	●	●	●		2.1-49

Applicable auto switch

Direct mounting	**Reed switch**	D-A9□/D-A9□V
	Solid state switch	D-F9□/D-F9□V D-F9□W/D-F9□WV

Made to Order

Refer to p.5.4-1 for "Made to Order" of series CU.

Cautions

①Operating speed

Make sure to connect a speed controller to the cylinder and adjust its speed to 500mm/s or less.
If a load is to be attached to the end of the rod, adjust the speed to the maximum speed shown in Fig. 1 or less, in accordance with the added mass.

Graph 1: Load weight and max. speed

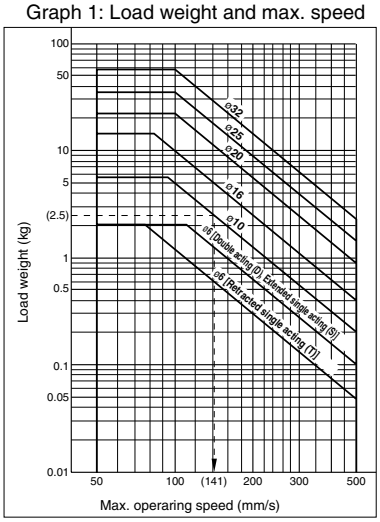

How to read graph
•Using the CU10 to drive a load weighing 2.5kg: From the vertical axis in the graph on the left, extend the horizontally from 2.5kg., and drop down from the point at which it intersects with the tube bore ø10. The maximum speed will be 141mm/s.

②Rod end allowable lateral load

Make sure that the lateral load that is applied to the rod end will be no more than the values shown in the tables.
The tables show the value for a single rod. For double rods, contact SMC.

Standard/Double acting single rod

Without auto switch: CU□-□D (N)

Model	Stroke (mm)												
	5	10	15	20	25	30	40	50	60	70	80	90	100
CU6	0.085	0.075	0.068	0.061	0.056	0.052	0.045	0.039	0.035	–	–	–	–
CU10	0.34	0.30	0.27	0.25	0.23	0.21	0.18	0.16	0.15	–	–	–	–
CU16	0.69	0.61	0.55	0.50	0.46	0.43	0.37	0.33	0.29	–	–	–	–
CU20	2.2	2.0	1.8	1.6	1.5	1.4	1.2	1.1	1.0	0.92	0.85	0.78	0.73
CU25	3.5	3.2	3.0	2.7	2.6	2.4	2.1	1.9	1.7	1.6	1.4	1.3	1.2
CU32	5.4	4.9	4.6	4.3	4.0	3.8	3.3	3.0	2.8	2.5	2.3	2.2	2.0

With auto switch: CDU□-□D (N)

Model	Stroke (mm)												
	5	10	15	20	25	30	40	50	60	70	80	90	100
CDU6	0.085	0.075	0.068	0.061	0.056	0.052	0.045	0.039	0.035	–	–	–	–
CDU10	0.34	0.30	0.27	0.25	0.23	0.21	0.18	0.16	0.15	–	–	–	–
CDU16	0.99	0.89	0.81	0.74	0.69	0.64	0.56	0.50	0.45	–	–	–	–
CDU20	3.0	2.7	2.5	2.3	2.1	2.0	1.8	1.6	1.4	1.3	1.2	1.1	1.0
CDU25	4.7	4.3	4.0	3.7	3.5	3.2	2.9	2.6	2.4	2.2	2.0	1.9	1.7
CDU32	7.1	6.6	6.1	5.7	5.4	5.1	4.6	4.1	3.8	3.5	3.2	3.0	2.8

Non-rotating rod

Without auto switch: CUK□-□D (N)

Model	Stroke (mm)												
	5	10	15	20	25	30	40	50	60	70	80	90	100
CUK6	0.075	0.068	0.061	0.056	0.052	0.048	0.042	0.037	0.033	–	–	–	–
CUK10	0.30	0.27	0.25	0.23	0.21	0.20	0.17	0.15	0.14	–	–	–	–
CUK16	0.55	0.50	0.46	0.43	0.40	0.37	0.33	0.29	0.26	–	–	–	–
CUK20	1.8	1.6	1.5	1.4	1.3	1.2	1.1	1.0	0.92	0.85	0.78	0.73	0.68
CUK25	3.0	2.7	2.6	2.4	2.2	2.1	1.9	1.7	1.6	1.4	1.3	1.2	1.2
CUK32	4.3	4.0	3.8	3.5	3.3	3.2	2.9	2.6	2.4	2.2	2.1	2.0	1.8

With auto switch: CDUK□-□D (N)

Model	Stroke (mm)												
	5	10	15	20	25	30	40	50	60	70	80	90	100
CDUK6	0.075	0.068	0.061	0.056	0.052	0.048	0.042	0.037	0.033	–	–	–	–
CDUK10	0.30	0.27	0.25	0.23	0.21	0.20	0.17	0.15	0.14	–	–	–	–
CDUK16	0.81	0.74	0.69	0.64	0.60	0.56	0.50	0.45	0.41	–	–	–	–
CDUK20	2.5	2.3	2.1	2.0	1.9	1.8	1.6	1.4	1.3	1.2	1.1	1.0	1.0
CDUK25	4.0	3.7	3.5	3.2	3.1	2.9	2.6	2.4	2.2	2.0	1.9	1.7	1.6
CDUK32	5.7	5.4	5.1	4.8	4.6	4.4	4.0	3.6	3.4	3.1	2.9	2.7	2.6

Single acting/Spring return (S)

Without auto switch: CU□-□S (N)

Model	Stroke (mm)		
	5	10	15
CU6	0.19	0.17	0.15
CU10	0.66	0.59	0.60
CU16	1.4	1.3	1.3
CU20	4.7	4.2	4.4
CU25	6.8	6.2	6.5
CU32	10	9.8	10

With auto switch: CDU□-□S (N)

Model	Stroke (mm)		
	5	10	15
CDU6	0.17	0.15	0.13
CDU10	0.66	0.59	0.60
CDU16	1.6	1.5	1.5
CDU20	5.3	4.8	4.9
CDU25	7.6	7.0	7.2
CDU32	12	11	11

Single acting/Spring extend (T)

Without auto switch: CU□-□T (N)

Model	Stroke (mm)		
	5	10	15
CU6	0.067	0.059	0.052
CU10	0.29	0.26	0.24
CU16	0.99	0.89	0.81
CU20	2.2	2.0	1.8
CU25	3.5	3.2	3.0
CU32	5.4	4.9	4.6

With auto switch: CDU□-□T (N)

Model	Stroke (mm)		
	5	10	15
CDU6	0.062	0.055	0.049
CDU10	0.29	0.26	0.24
CDU16	0.99	0.89	0.81
CDU20	3.0	2.7	2.5
CDU25	4.7	4.3	4.0
CDU32	7.1	6.6	6.1

Non-rotating rod
Single acting/Spring return (S)

Without auto switch: CUK□-□S (N)

Model	Stroke (mm)		
	5	10	15
CUK6	0.17	0.15	0.14
CUK10	0.59	0.54	0.56
CUK16	1.1	1.0	1.1
CUK20	3.9	3.6	3.8
CUK25	5.7	5.3	5.7
CUK32	8.5	7.9	8.6

With auto switch: CDUK□-□S (N)

Model	Stroke (mm)		
	5	10	15
CDUK6	0.15	0.13	0.12
CDUK10	0.59	0.54	0.56
CDUK16	1.3	1.2	1.3
CDUK20	4.4	4.1	4.3
CDUK25	6.5	6.1	6.4
CDUK32	9.7	9.1	9.6

Non-rotating rod
Single acting/Spring extend (T)

Without auto switch: CUK□-□T (N)

Model	Stroke (mm)		
	5	10	15
CUK6	0.059	0.052	0.047
CUK10	0.26	0.24	0.22
CUK16	0.81	0.74	0.69
CUK20	1.8	1.6	1.5
CUK25	3.0	2.7	2.6
CUK32	4.3	4.0	3.8

With auto switch: CDUK□-□T (N)

Model	Stroke (mm)		
	5	10	15
CDUK6	0.055	0.049	0.044
CDUK10	0.26	0.24	0.22
CDUK16	0.81	0.74	0.69
CDUK20	2.5	2.3	2.1
CDUK25	4.0	3.7	3.5
CDUK32	5.7	5.4	5.1

Free Mount Cylinder/Double Acting Single Rod

Series CU

ø6, ø10, ø16, ø20, ø25, ø32

How to Order

Standard □ CU 6 — 30 D

With auto switch □ CDU 6 — 30 D — A90 □

Thread Port (ø32)

—	Rc(PT)
E	G(PF)

Built-in magnet

Bore size

6	6mm
10	10mm
16	16mm
20	20mm
25	25mm
32	32mm

Stroke (mm)

ø6, ø10, ø16	5, 10, 15, 20, 25, 30
ø20, ø25, ø32	5, 10, 15, 20, 25, 30, 40, 50

Action

D	Double acting

Number of Auto switches

—	2
S	1

Auto switch

—	Without auto switch

Refer to the table below for auto switch model no.

These auto switches have been changed
Contact SMC or view www.smcworld.com

F9N➡**M9N**	F9NV➡**M9NV**
F9P➡**M9P**	F9PV➡**M9PV**
F9B➡**M9B**	F9BV➡**M9BV**

Auto Switches/Refer to p.5.3-2 for further information on auto switches.

Style	Special function	Electrical entry	Indicator	Wiring (Output)	Load voltage DC		Load voltage AC	Auto switch model. Vertical	Auto switch model. In-line	Lead wire (m)* 0.5 (–)	Lead wire (m)* 3 (L)	Lead wire (m)* 5 (Z)	Applicable load	
Reed switch	—	Grommet	No	2 wire	24V	5V 12V	≤100V	**A90V**	**A90**	●	●	—	IC	Relay, PLC
						12V	100V	**A93V**	**A93**	●	●	—	—	
			Yes	3 Wire (Equivalent to NPN)	—	5V	—	**A96V**	**A96**	●	●	—	IC	
Solid state switch	—	Grommet	Yes	3 Wire (NPN)	24V	12V	—	**F9NV**	**F9N**	●	●	—	—	Relay, PLC
				3 wire (PNP)				**F9PV**	**F9P**	●	●	—		
				2 wire				**F9BV**	**F9B**	●	●	—		
	Diagnostic (2 colour)			3 wire (NPN)				**F9NWV**	**F9NW**	●	●	○		
				3 wire (PNP)				**F9PWV**	**F9PW**	●	●	○		
				2 wire				**F9BWV**	**F9BW**	●	●	○		
	Water resistant (2 colour)							—	**F9BA**	—	●	○		

*Lead wire length 0.5m····· — (Example) A93 5m····· Z (Example) F9NWZ
3m ····· L (Example) A93L

*Solid state switches marked "○" are manufactured upon receipt of order.
D-9□ auto switch can be installed. Refer to p.5.3-21 and 5.3-22 for further information on D-90, D-90A, D-93A and D-97.

⚠ Precautions

**Be sure to read before handling.
Refer to p.0-39 to 0-46 for Safety Instructions precautions and common precautions.**

Tightening Torque

Bore size (mm)	Hex. socket head cap screw (mm)	Tightening torque Nm
ø6, ø10	M3	1.08 ±10%
ø16	M4	2.45 ±10%
ø20, ø25	M5	5.10 ±10%
ø32	M6	8.04 ±10%



Specifications

Bore size (mm)	ø6	ø10	ø16	ø20	ø25	ø32
Fluid	Air					
Proof pressure	1.05MPa					
Max. operating pressure	0.7MPa					
Min. operating pressure	0.12MPa	0.06MPa		0.05MPa		
Ambient and fluid temperature	Without auto switch: –10°C to 70°C (No freezing) With auto switch: –10°C to 60°C					
Lubrication	Not required (Non-lube)					
Operating piston speed	50 to 500mm/s					
Cushion	Rubber bumper					
Rod end thread	Male thread					
Thread tolerance	JIS class 2					
Tolerance of stroke length	$^{+1.0}_{0}$ mm					

Standard Stroke

(mm)

Bore size (mm)	Standard stroke(mm)
ø6, ø10, ø16	5, 10, 15, 20, 25, 30
ø20, ø25, ø32	5, 10, 15, 20, 25, 30, 40, 50

Refer to p.2.1-45 for long stroke.

Minimum Strokes for Auto Switch Mounting

(mm)

Number of auto switches	Applicable auto switch		
	D-A9□/D-A9□V	**D-F9□/D-F9D-F9□V**	**D-F9□W/D-F9□WV D-F9BA**
1	5	5	5
2	10	5	10

JIS symbol
Double acting/Single rod



Theoretical Force

Unit: N

Bore size (mm)	Rod diameter (mm)	Operating direction	Piston area (mm^2)	Operating pressure (MPa)		
				0.3	0.5	0.7
ø6	**3**	OUT	28.3	8.49	14.2	19.8
		IN	21.2	6.36	10.6	14.8
ø10	**4**	OUT	78.5	23.6	39.3	55.0
		IN	66.0	19.8	33.0	46.2
ø16	**6**	OUT	201	60.3	101	141
		IN	172	51.6	86.0	121
ø20	**8**	OUT	314	94.2	157	220
		IN	264	79.2	132	185
ø25	**10**	OUT	491	147	246	344
		IN	412	124	206	288
ø32	**12**	OUT	804	241	402	563
		IN	691	207	346	454

Made to Order

Refer to p.5.4-1 for made to order specifications of series CU.

Weight/( ) With D-A90

Unit: g

Model	Cylinder stroke(mm)							
	5	10	15	20	25	30	40	50
C(D)U6-□D	22 (27)	25 (350)	28 (38)	31 (41)	34 (44)	37 (47)	–	–
C(D)U10-□D	36 (41)	40 (50)	44 (54)	48 (58)	52 (62)	56 (66)	–	–
C(D)U16-□D	50 (75)	56 (86)	62 (92)	68 (98)	74 (104)	80 (110)	–	–
C(D)U20-□D	95 (128)	106 (143)	117 (154)	128 (165)	139 (176)	150 (187)	172 (209)	194 (231)
C(D)U25-□D	176 (230)	193 (252)	210 (269)	227 (286)	244 (303)	261 (320)	295 (354)	329 (388)
C(D)U32-□D	262 (335)	286 (364)	310 (388)	334 (412)	358 (436)	382 (460)	430 (508)	478 (556)

∗Refer to p.5.3-75 for auto switch weight.

Copper Free

20-CU | **Bore size** | **Stroke** | **D**

•Copper free

To prevent the generation of copper ions in order to eliminate any influences of copper ions or fluororesins on colour CRTs, copper materials have been electroless nickel plated or replaced with non-copper materials.

Min. Operating Pressure

(MPa)

Bore size(mm)	ø6	ø10, ø16	ø20, ø25, ø32
Min. operating press.	0.12	0.06	0.05

Specifications

Action	Double acting, single rod style
Bore size (mm)	ø6, ø10, ø16, ø20, ø25, ø32
Max. operating pressure	1.05MPa
Cushion	Rubber bumper
Stroke	Same as standard model (Refer to p.2.1-12)
Auto switch	Attachable

Construction

ø6

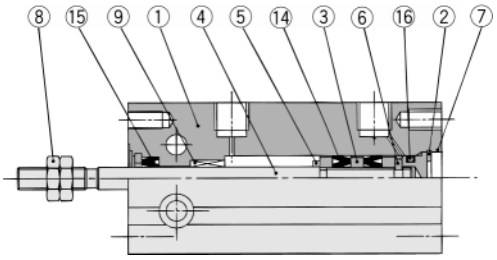

ø10

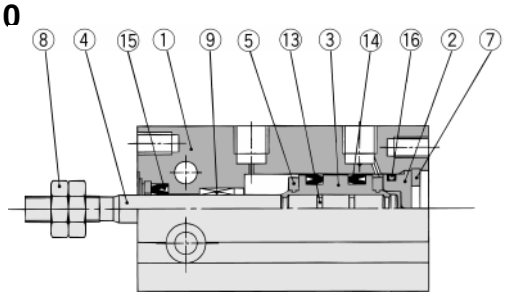

ø16 to ø32

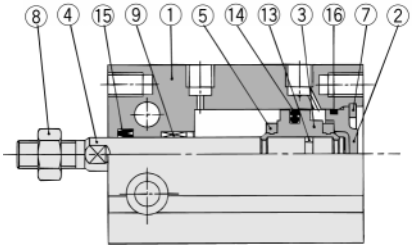

With auto switch

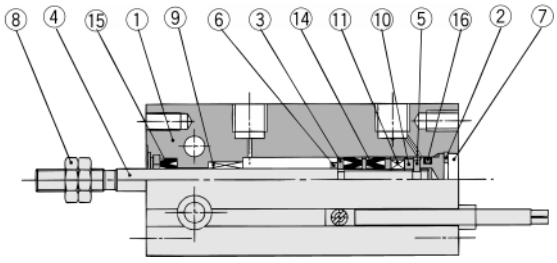

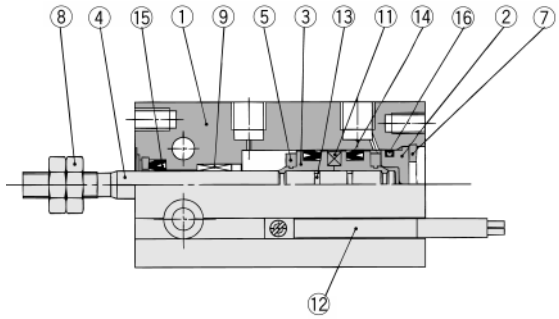

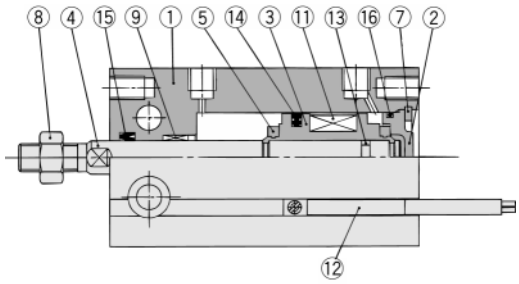

Component Parts

No.	Description	Material	Note
①	Cylinder tube	Aluminum alloy	Hard anodized
②	Head cover	Brass	ø6 to ø10, Electroless nickel plated
		Aluminum alloy	ø16 to ø32, White chromated
③	Piston	Brass	ø6 to ø10
		Aluminum alloy	ø16 to ø32, Chromated
④	Piston rod	Stainless steel	
⑤	Bumper A	Urethane	
⑥	Bumper B	Urethane	
⑦	Snap ring	Carbon tool steel	Phosphate coating
⑧	Rod edge nut	Carbon steel	Nickel plated
⑨	Bushing	Oil impregnated sintered alloy	
⑩	Magnet holder	Brass	ø6
⑪	Magnet	Magnet material	
⑫	Auto switch	——	
⑬	Piston gasket	NBR	
⑭*	Piston seal		
⑮*	Rod seal		
⑯*	Gasket		

Replacement Parts: Seal Kits

Bore size (mm)	Kit No.	Contents
ø10	CU10D-PS	Kits includes items ⑭, ⑮ and ⑯ from the table above.
ø16	CU16D-PS	
ø20	CU20D-PS	
ø25	CU25D-PS	
ø32	CU32D-PS	

Seal kits consist of items ⑭, ⑮ and ⑯ contained in one kit, and can be ordered using the order number for each respective tube bore size.

Dimensions/Double Acting Single Rod

ø6/ø10

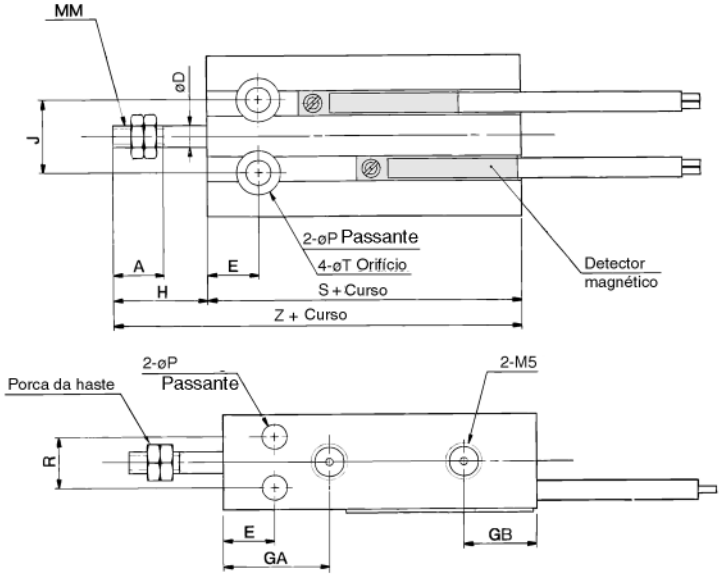

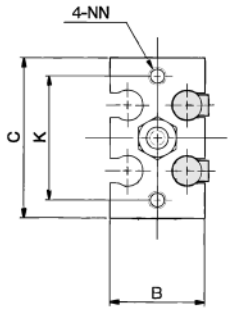

ø16 a ø32

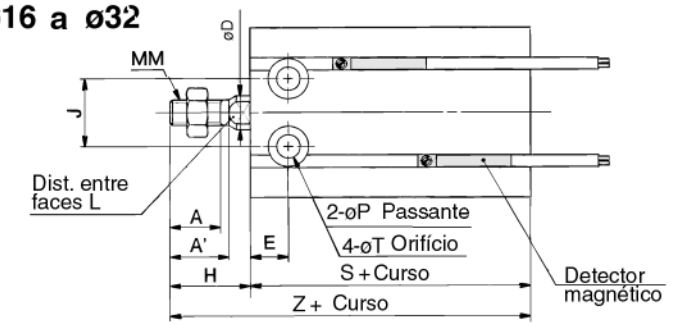

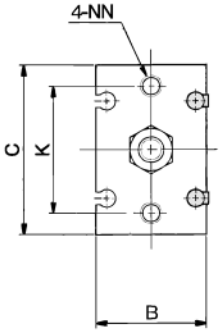

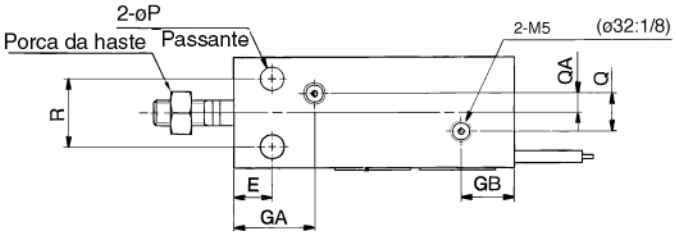

Rod end nut/Option

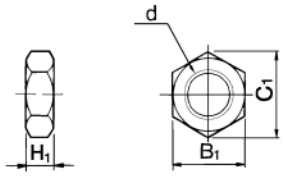

Material: Carbon steel

Part No.	Tube size (mm)	d	H1	B1	C1
NTP-006	**6**	M3	1.8	5.5	6.4
NTP-010	**10**	M4	2.4	7	8.1
NTJ-015A	**16**	M5	4	8	9.2
NT-015A	**20**	M6	5	10	11.5
NT-02	**25**	M8	5	13	15.0
NT-03	**32**	M10 X 1.25	6	17	19.6

(mm)

Bore (mm)	A	A'	B	C	D	E	GA	GB	H	J	K	L	MM	NN	P	Q	QA
6	7	–	13	22	3	7	15	10	13	10	17	–	M3	M3 Depth5	3.2	–	–
10	10	–	15	24	4	7	16.5	10	16	11	18	–	M4	M3 Depth5	3.2	–	–
16	11	12.5	20	32	6	7	16.5 (1)	11.5	16	14	25	5	M5	M4 Depth6	4.5	4	2
20	12	14	26	40	8	9	19	12.5	19	16	30	6	M6	M5 Depth8	5.5	9	4.5
25	15.5	18	32	50	10	10	21.5	13	23	20	38	8	M8	M5 Depth8	5.5	9	4.5
32	19.5	22	40	62	12	11	23	12.5	27	24	48	10	M10 X 1.25	M6 Depth9	6.6	13.5	4.5

Bore (mm)	R	T	W/o auto switch		W/ auto switch	
			S	Z	S	Z
6	7	6 Depth4.8	33	46	33	46
10	9	6 Depth5	36	52	36	52
16	12	7.6 Depth6.5	30	46	40	56
20	16	9.3 Depth8	36	55	46	65
25	20	9.3 Depth9	40	63	50	73
32	24	11 Depth11.5	42	69	52	79

Note 1) 5 stroke (CU16-5D): 14.5mm

Series CDU
Auto Switch Specifications

Refer to the p.5.3-2 for details on auto switches.

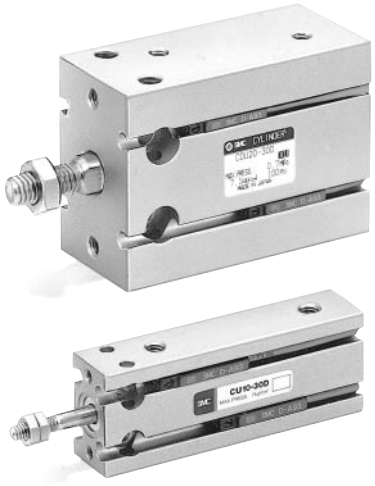

Applicable auto switch model

Bore size	Auto switch model		Electrical entry (Function)		Page
ø12, ø16 ø20, ø25	Reed switch	**D-A90**	Grommet	2 wire, In-line	5.3-19
		D-A93			
		D-A96		3 wire, In-line	5.3-19
		D-A90V		2 wire, Perpendicular	5.3-20
		D-A93V			
		D-A96V		3 wire, Perpendicular	5.3-20
	Solid state switch	**D-F9N**		3 wire, NPN In-line	5.3-39
		D-F9P		3 wire, PNP In-line	5.3-39
		D-F9B		2 wire, In-line	5.3-39
		D-F9NW		3 wire, NPN In-line (2 colour)	5.3-66
		D-F9PW		3 wire, PNP In-line (2 colour)	5.3-66
		D-F9BW		2 wire, In-line (2 colour)	5.3-66
		D-F9NV		3 wire, NPN Perpendicular	5.3-39
		D-F9PV		3 wire, PNP Perpendicular	5.3-39
		D-F9BV		2 wire, Perpendicular	5.3-39
		D-F9NWV		3 wire, NPN Perpendicular (2 colour)	5.3-66
		D-F9PWV		3 wire, PNP Perpendicular (2 colour)	5.3-66
		D-F9BWV		2 wire, Perpendicular (2 colour)	5.3-66
		D-F9BAL		2 wire, In-line (2 colour), water resistant	5.3-67

D-9□ auto switches are attachable. Refer to p.5.3-21 and 5.3-22 for further information on D-90, D-90A, D-93A and D-97.

Auto Switch Mounting

D-A9□, F9□, A9□V, F9□

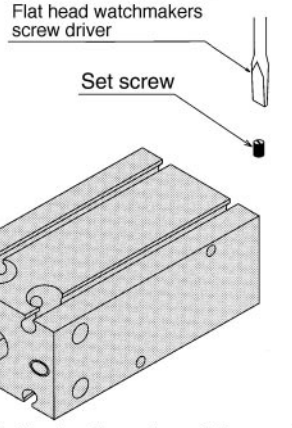

- When tightening the auto switch mounting screw, use a watch makers screw driver with a handle about 5 to 6mm in diameter.
- Also tighten to a torque of approximately 0.10 to 0.20Nm.

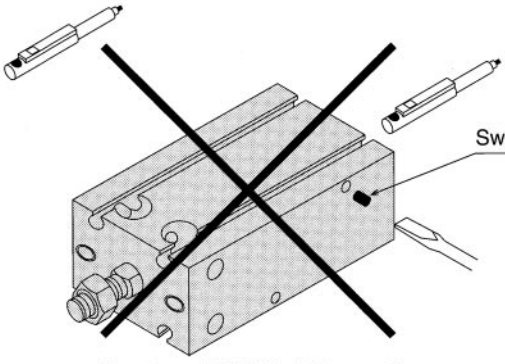

- Do not use BU-1 (Switch mounting screw for D-9□ auto switch). Auto switch may be damaged.

Auto Switch Groove Position

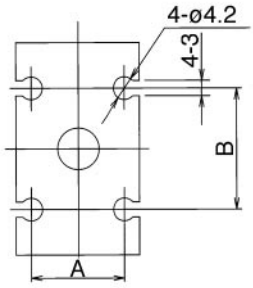

(mm)

Bore size (mm)	A	B
ø **6**	8.2	9
ø**10**	10.3	13
ø**16**	15	18
ø**20**	21	23
ø**25**	27	25
ø**32**	35	27

Precautions on Proximity Installation

When universal mounting cylinders equipped with D-A9□ or D-F9□ auto switches are used, the auto switches could activate unintentionally if the installed distance is less than the dimensions shown in the table. Therefore, make sure to provide a greater clearance. Due to unavoidable circumstances, if they must be used with less distance than the dimensions given in the table, the cylinders must be shielded. Therefore, affix a steel plate or a magnetic shield plate (MU-S025) to the area on the cylinder that corresponds to the adjacent auto switch. (Contact SMC for details.)

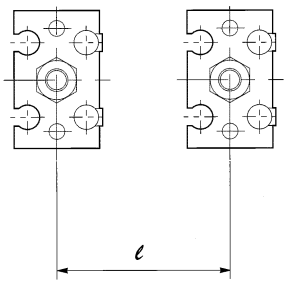

Bore size(mm)	Installed distance ℓ (mm)
ø **6**	18
ø**10**	20
ø**16**	33
ø**20**	40
ø**25**	46
ø**32**	56

Auto Switch Mounting Position

D-A9□
D-F9□

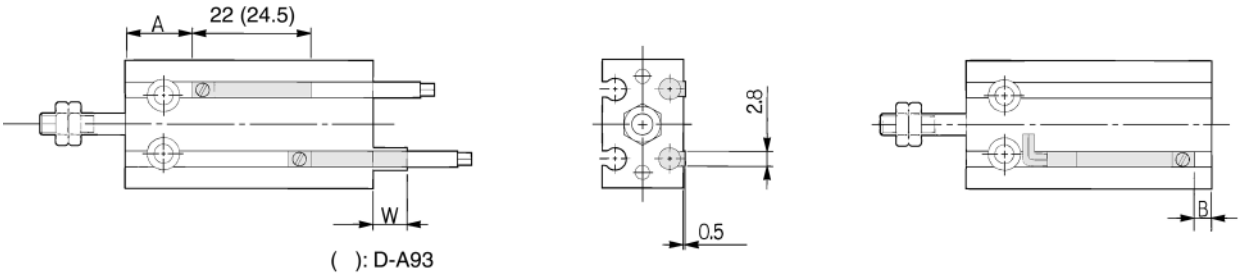

D-A9□V
D-F9□V

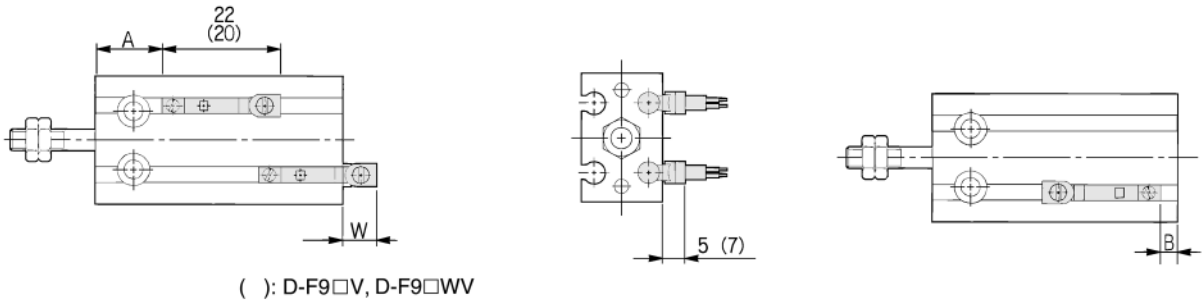

CDU Double acting single rod

(mm)

Bore size (mm)	D-A9□/D-A9□V			D-F9N/D-F9B/D-F9P/D-F9□W			D-F9□V/D-F9□WV			D-F9BA		
	A	B	W	A	B	W	A	B	W	A	B	W
6	13	–0.5	2.5(5)	17.5	4	6.5	17.5	4	4.5	16.5	3	16.5
10	12	3	–1.5(1)	16.5	7.5	2.5	16.5	7.5	0.5	15.5	6.5	12.5
16	15.5	3.5	–2(0.5)	20	8	2	20	8	0	19	7	12
20	19.5	5.5	–4(–1.5)	24	10	0	24	10	–2	23	9	10
25	22	7	–5.5(–3)	27.5	11.5	–1.5	27.5	11.5	–3.5	25.5	10.5	8.5
32	23	8	–6.5(–4)	28.5	12.5	–2.5	28.5	12.5	–4.5	26.5	11.5	7.5

Note 1) Negative figures of the table show dimensions mounted inside cylinder body.
Note 2) In the case of the 5mm stroke or the 10mm stroke, there are times in which the switch will not turn OFF or 2 switches will turn ON simultaneously due to their movement range. Therefore, set the position approximately 1 to 4mm outward from the values given in the table above. Then, perform an operation inspection to make sure that the switches operate normally (if 1 switch is used, make sure that it turns ON and OFF properly; if 2 switches are used, make sure that both switches turn ON).
Note 3) Figures in ( ) are for D-A93.

⚠ Precautions

Be sure to read before handling. Refer to p.0-44 to 0-46 for common precautions of auto switch.

Free Mount Cylinder/Double Acting Double Rod

Series CUW

ø6, ø10, ø16, ø20, ø25, ø32

How to Order

Standard □ CUW 6 — 30 D

With auto switch □ CDUW 6 — 30 D — A90 □

Thread Port (ø32)

—	Rc(PT)
E	G(PF)

Built-in magnet

Double rod style

Bore size

6	6mm
10	10mm
16	16mm
20	20mm
25	25mm
32	32mm

Stroke (mm)

ø6, ø10, ø16	5, 10, 15, 20, 25, 30
ø20, ø25, ø32	5, 10, 15, 20, 25, 30, 40, 50

Action

D	Double acting

Auto switch

—	Without auto switch

Refer to the table below for auto switch model no.

Number of auto switches

—	2
S	1

These auto switches have been changed
Contact SMC or view www.smcworld.com

F9N➡**M9N**	F9NV➡**M9NV**
F9P➡**M9P**	F9PV➡**M9PV**
F9B➡**M9B**	F9BV➡**M9BV**

Applicable Auto Switches/Refer to p.5.3-2 for further information on auto switches.

Style	Special function	Electrical entry	Indicator	Wiring (Output)	Load voltage			Model		Lead wire (m)*			Applicable load	
					DC		AC	Perp.	In-line	0.5 (–)	3 (L)	5 (Z)		
Reed switch	—	Grommet	No	2 wire	24V	5V 12V	≤ 100V	**A90V**	**A90**	●	●	—	IC	Replay PLC
			Yes			12V	100V	**A93V**	**A93**	●	●	—	—	
				3 wire (Equiv.NPN)	—	5V	—	**A96V**	**A96**	●	●	—	IC	
Solid state switch	—	Grommet	Yes	3 wire (NPN)	24V	12V	—	**F9NV**	**F9N**	●	●	—	—	Replay PLC
				3 wire (PNP)				**F9PV**	**F9P**	●	●	—		
				2 wire				**F9BV**	**F9B**	●	●	—		
	Diagnostic (2 colour)			3 wire (NPN)				**F9NWV**	**F9NW**	●	●	○		
				3 wire (PNP)				**F9PWV**	**F9PW**	●	●	○		
				2 wire				**F9BWV**	**F9BW**	●	●	○		
	Water resistant (2 colour)							—	**F9BA**	—	●	○		

*Lead wire length 0.5m····· – (Example) A93
3m····· L (Example) A93L
5m····· Z (Example) F9NWZ

*Solid state auto switches marked with a "○" are manufactured upon receipt of order.



Specifications

Bore size (mm)	ø6	ø10	ø16	ø20	ø25	ø32
Fluid	Air					
Proof pressure	1.05MPa					
Max. operating pressure	0.7MPa					
Min. operating pressure	0.15MPa	0.10MPa		0.08MPa		
Ambient and fluid temperature	Without auto switch: –10 °C to 70 °C Without auto switch: –10 °C to 60 °C (No freezing)					
Lubrcation	Not required (Non-lube)					
Operating piston speed	50 to 500mm/s					
Cushion	Rubber bumper					
Rod end thread	Male thread					
Thread tolerance	JIS class 2					
Stroke tolerance	$^{+1.0}_{0}$ mm					

Standard Stroke

(mm)

Bore size (mm)	Standard stroke(mm)
ø6, ø10, ø16	5, 10, 15, 20, 25, 30
ø20, ø25, ø32	5, 10, 15, 20, 25, 30, 40, 50

Minimum Strokes for Auto Switch Mounting

(mm)

Number of auto switches	Applicable auto switch model		
	D-A9□/D-A9□V	**D-F9□/D-F9□V**	**D-F9□W/D-F9□WV D-F9BA**
1	5	5	5
2	10	5	10

JIS symbol
Double acting/Double rod

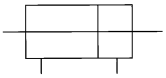

Theoretical Force

(N)

Bore size (mm)	Rod diameter (mm)	Piston area (mm^2)	Operating pressure (MPa)		
			0.3	0.5	0.7
ø6	**3**	21.2	6.36	10.6	14.8
ø10	**4**	66.0	19.8	33.0	46.2
ø16	**6**	172	51.6	86.0	121
ø20	**8**	264	79.2	132	185
ø25	**10**	412	124	206	288
ø32	**12**	691	207	346	484

⚠ Precautions

Be sure to read before handling.
Refer to p.0-39 to 0-46 for Safety Instructions and common precautions.

Weight/( ) With D-A90

Unit: g

Model	Stroke (mm)							
	5	10	15	20	25	30	40	50
C(D)UW6-□D	27 (32)	30 (40)	34 (44)	37 (47)	40 (50)	44 (54)	–	–
C(D)UW10-□D	44 (49)	49 (59)	53 (63)	58 (68)	62 (72)	67 (77)	–	–
C(D)UW16-□D	74 (99)	81 (111)	88 (118)	95 (125)	102 (132)	109 (139)	–	–
C(D)UW20-□D	132 (16)	145 (182)	158 (195)	171 (208)	184 (221)	197 (234)	223 (260)	250 (287)
C(D)UW25-□D	240 (294)	260 (319)	280 (339)	300 (359)	321 (380)	341 (400)	381 (440)	421 (480)
C(D)UW32-□D	365 (438)	394 (472)	422 (500)	451 (529)	479 (557)	508 (586)	586 (664)	622 (700)

Refer to p.5.3-75 for weight of auto switch.

Tightening Torque

Refer to p.2.1-11 for CUW series mounting

Construction

ø6

With auto switch

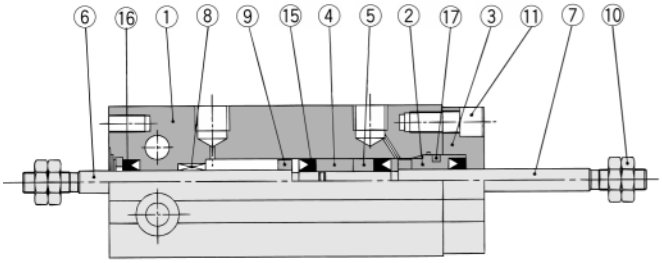

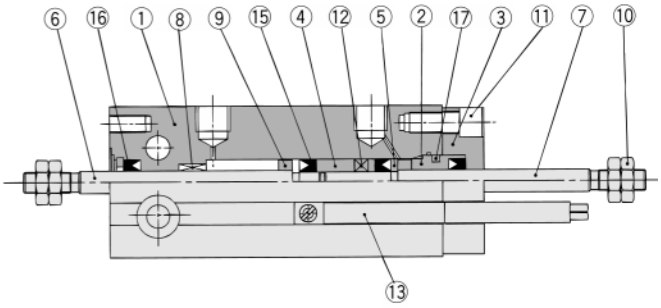

ø10

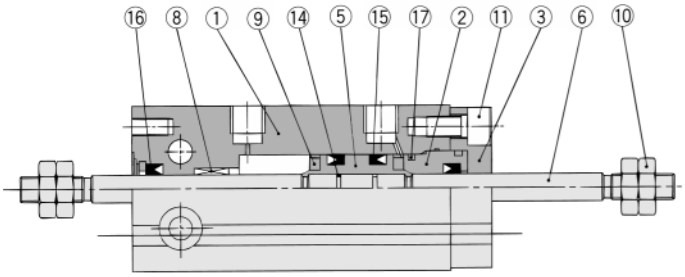

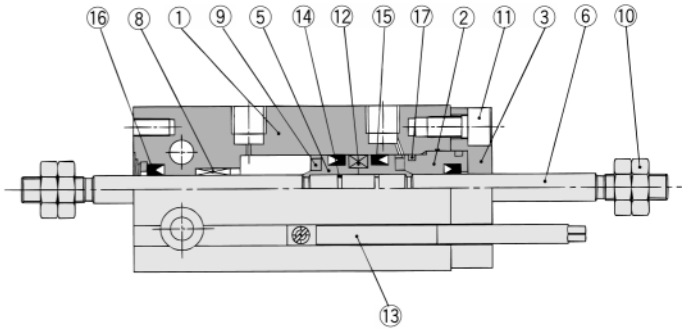

ø16 to ø32

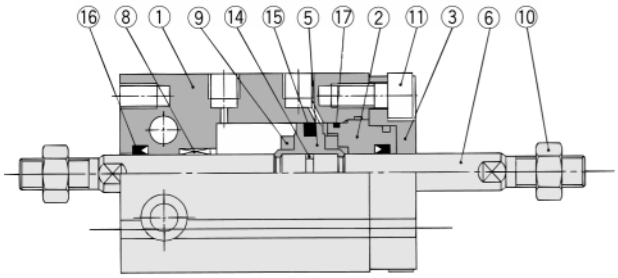

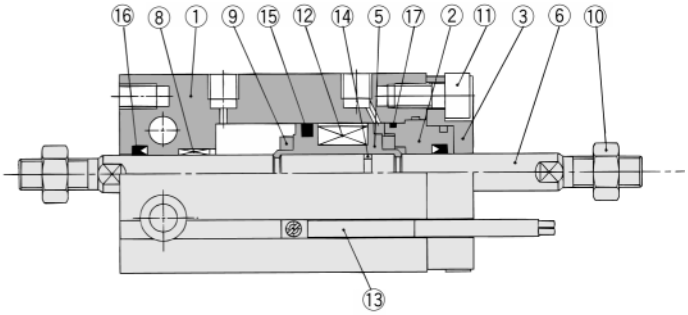

Component Parts

No.	Description	Material	Note
①	Cylinder tube	Aluminum alloy	Hard anodized
②	Rod cover	Aluminum bearing alloy	Chromated
③	Rod cover retainer	Aluminum alloy	Hard anodized
④	Piston	Brass	ø6
⑤	Piston	Brass	ø6, ø10
		Aluminum alloy	ø16 to ø32, chromated
⑥	Piston rod	Stainless steel	
⑦	Piston rod	Stainless steel	ø6
⑧	Bushing	Oil impregnated sintered alloy	

No.	Description	Material	Note
⑨	Bumper	Urethane	
⑩	Rod end nut	Carbon steel	Nickel plated
⑪	Hex. socket head cap screw	Carbon steel	Nickel plated
⑫	Magnet	Magnet material	
⑬	Auto switch	——	
⑭	Piston gasket	NBR	
⑮	Piston seal		
⑯	Rod seal		
⑰	Gasket		

Replacement Parts

No.	Description	Material	Bore size/Part No.					
			ø6	**ø10**	**ø16**	**ø20**	**ø25**	**ø32**
⑮	Piston seal	NBR	MYP-6A	MYP-10A	PPD-16	PPD-20	PPD-25	PPD-32
⑯	Rod seal		MYR-3	MYR-4	DYR-6K	DYR-8K	DYR-10SK	DYR-12
⑰	Gasket		ø7 X ø5 X ø1	ø10 X ø8 X ø1	ø16 X ø14 X ø1	C18	C22	C29

Dimensions/Double Acting Double Rod

ø6, ø10

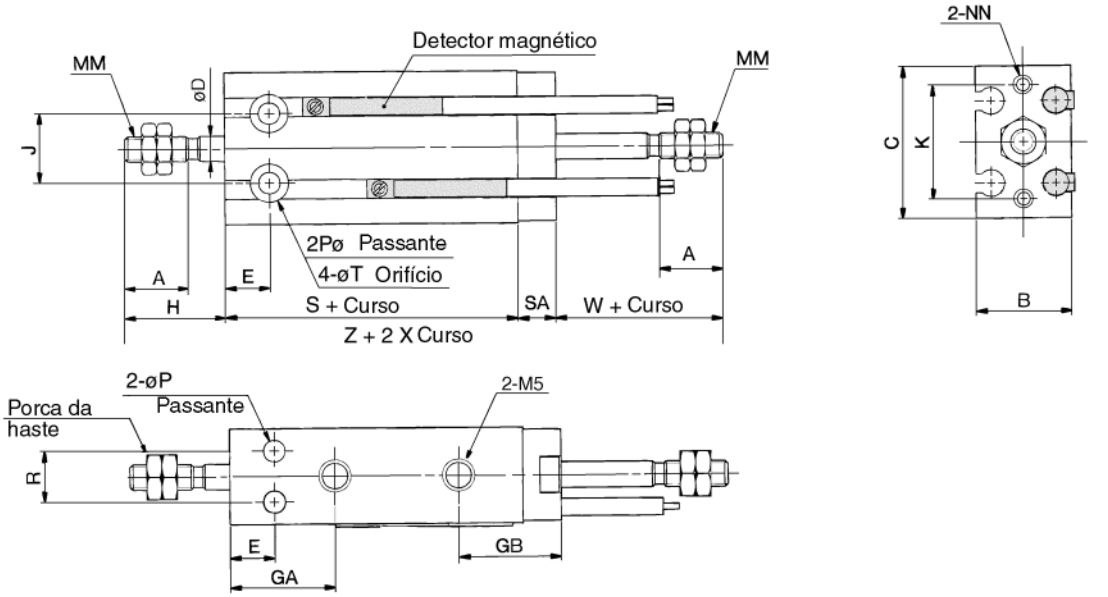

ø16 to ø32

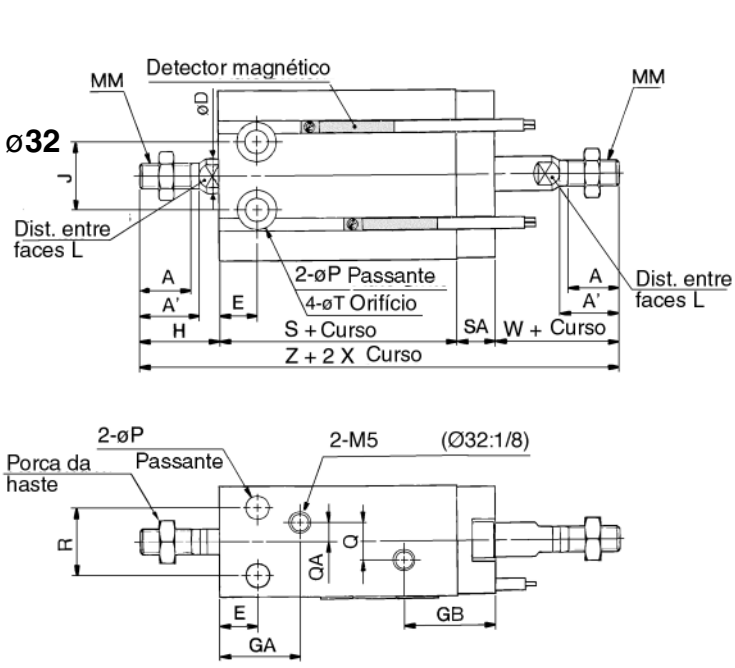

Porca da haste/opções

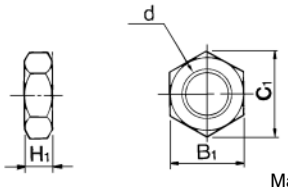

Material: Carbon steel

Part No.	Tube bore size (mm)	d	H_1	B_1	C_1
NTP-006	**6**	M3	1.8	5.5	6.4
NTP-010	**10**	M4	2.4	7	8.1
NTJ-015A	**16**	M5	4	8	9.2
NT-015A	**20**	M6	5	10	11.5
NT-02	**25**	M8	5	13	15.0
NT-03	**32**	M10 X 1.25	6	17	19.6

(mm)

Bore (mm)	A	A'	B	C	D	E	GA	GB	H	J	K	L	MM	NN	P	Q	QA
6	7	–	13	22	3	7	15	16	13	10	17	–	M3	M3 Depth5	3.2	–	–
10	10	–	15	24	4	7	16.5	16	16	11	18	–	M4	M3 Depth5	3.2	–	–
16	11	12.5	20	32	6	7	16.5[(1)]	19	16	14	25	5	M5	M4 Depth6	4.5	4	2
20	12	14	26	40	8	9	19	21.5	19	16	30	6	M6	M5 Depth8	5.5	9	4.5
25	15.5	18	32	50	10	10	21.5	22	23	20	38	8	M8	M5 Depth8	5.5	9	4.5
32	19.5	22	40	62	12	11	23	22.5	27	24	48	10	M10 X 1.25	M6 Depth9	6.6	13.5	4.5

Bore (mm)	R	SA	T	W	W/o auto switch		W/ auto switch	
					S	Z	S	Z
6	7	6	6 Depth4.8	13	38	70	38	70
10	9	6	6 Depth5	16	36	74	36	74
16	12	7.5	7.6 Depth6.5	16	30	69.5	40	79.5
20	16	9	9.3 Depth8	19	36	83	46	93
25	20	9	9.3 Depth9	23	40	95	50	105
32	24	10	11 Depth11.5	27	42	106	52	116

Note 1) 5 stroke (CUW16-5D): GA=14.5

Auto Switch Mounting Position

D-A9□
D-F9□

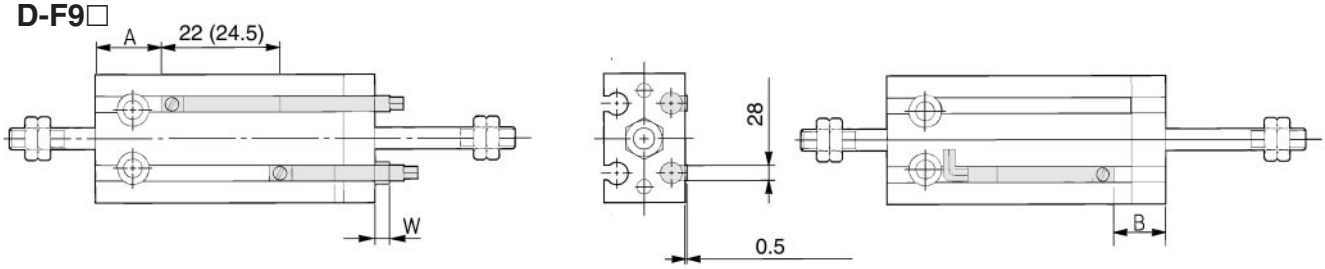

( ): D-A93

D-A9□V
D-F9□V

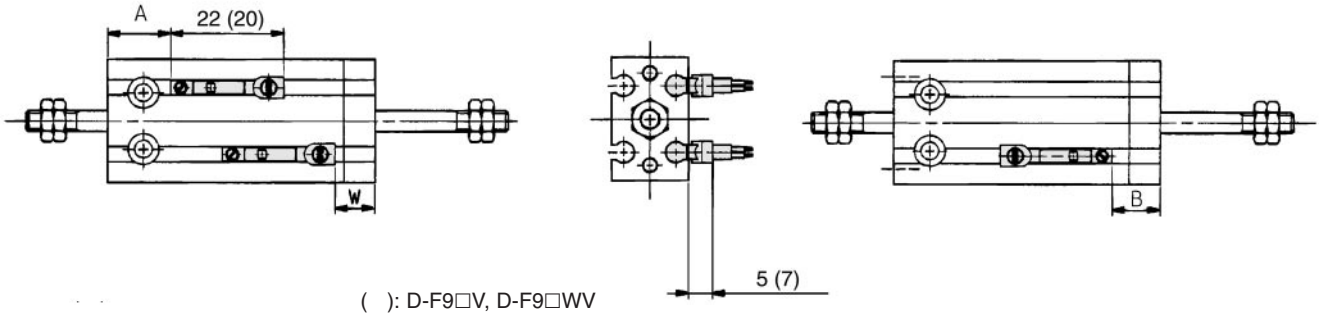

( ): D-F9□V, D-F9□WV

(mm)

Bore (mm)	D-A9□/D-A9□V			D-F9N/D-F9B/D-F9P/D-F9□W			D-F9□V/D-F9□WV			D-F9BA		
	A	B	W	A	B	W	A	B	W	A	B	W
6	13	5.5	−3.5(−1)	17.5	10	0.5	17.5	10	−1.5	16.5	10	10.5
10	12	9	−7.5(−5)	16.5	13.5	−3.5	16.5	13.5	−5.5	15.5	13.5	6.5
16	15.5	11	−9.5(−7)	20	15.5	−5.5	20	15.5	−7.5	19	15.5	4.5
20	19.5	14.5	−13(−10.5)	24	19	−9	24	19	−11	23	19	1
25	22	16	−14.5(−12)	27.5	20.5	−10.5	27.5	20.5	−12.5	25.5	20.5	-0.5
32	23	18	−16.5(−14)	28.5	22.5	−12.5	28.5	22.5	−14.5	26.5	22.5	-2.5

Note 1) Negative figures of the table show dimensions mounted inside cylinder body.
Note 2) In the case of the 5mm stroke or the 10mm stroke, there are times in which the switch will not turn OFF or 2 switches will turn ON simultaneously due to their movement range. Therefore, set the position approximately 1 to 4mm outward from the values given in the table above. Then, perform an operation inspection to make sure that the switches operate normally (if 1 switch is used, make sure that it turns ON and OFF properly; if 2 switches are used, make sure that both switches turn ON).
Note 3) Figures in ( ) are for D-A93.

Free Mount Cylinder/Single Acting Spring Return/Extend

Series CU

ø6, ø10, ø16, ø20, ø25, ø32

How to Order

Standard: □ CU 10 — 15 S

With auto switch: □ CDU 10 — 15 S — A90 □

Thread Port (ø32)

—	Rc(PT)
E	G(PF)

Built-in magnet

Bore size

6	6mm
10	10mm
16	16mm
20	20mm
25	25mm
32	32mm

Stroke (mm)

ø6, ø10, ø16 ø20, ø25, ø32	5, 10, 15

Action

S	Single acting spring return
T	Single acting spring extend

Auto switch

—	Without auto switch

Refer to the table below for auto switch model no.

Number of auto switches

—	2
S	1

These auto switches have been changed
Contact SMC or view www.smcworld.com

F9N➡**M9N**	F9NV➡**M9NV**
F9P➡**M9P**	F9PV➡**M9PV**
F9B➡**M9B**	F9BV➡**M9BV**

Applicable Auto Switches/Refer p.5.3-2 for further information on auto switches.

Style	Special function	Electrical entry	Indicator	Wiring (Output)	Load voltage			Model		Lead wire (m)*			Applicable load	
					DC		AC	Perp.	In-Line	0.5 (—)	3 (L)	5 (Z)		
Reed switch	—	Grommet	No	2 wire	24V	5V 12V	≤ 100V	**A90V**	**A90**	●	●	—	IC	Relay, PLC
			Yes			12V	100V	**A93V**	**A93**	●	●	—	—	
				3 wire (Equiv. NPN)	—	5V	—	**A96V**	**A96**	●	●	—	IC	
Solid state switch	—	Grommet	Yes	3 wire (NPN)	24V	12V	—	**F9NV**	**F9N**	●	●	—	—	Relay, PLC
				3 wire (PNP)				**F9PV**	**F9P**	●	●	—		
				2 wire				**F9BV**	**F9B**	●	●	—		
	Diagnostic (2 colour)			3 wire (NPN)				**F9NWV**	**F9NW**	●	●	○		
				3 wire (PNP)				**F9PWV**	**F9PW**	●	●	○		
				2 wire				**F9BWV**	**F9BW**	●	●	○		
	Water resistant (2 colour)			2 wire				—	**F9BA**	—	●	○		



Specifications

Bore size (mm)	ø6	ø10	ø16	ø20	ø25	ø32
Fluid	Air					
Proof pressure	1.05MPa					
Max. operating pressure	0.7MPa					
Min. operating pressure	0.2MPa	0.15MPa		0.13MPa		
Ambient and fluid temperature	Without auto switch: –10°C to 70°C With auto switch : –10°C to 60°C (No freezing)					
Lubrication	Not required (Non-lube)					
Operating piston speed	50 to 500mm/s					
Cushion	Rubber bumper (1)					
Rod end thread	Male thread					
Thread tolerance	JIS class 2					
Stroke tolerance	$^{+1.0}_{0}$ mm					

Note 1) ø6 with auto switch style: One side rubber bumper

JIS symbol

Single action/Spring return

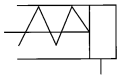

Single action/Spring extend

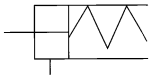

Standard Stroke

(mm)

Bore size (mm)	Standard stroke (mm)
ø6, ø10, ø16, ø20, ø25, ø32	5, 10, 15

Minimum Strokes for Auto Switch Mounting

(mm)

Number of auto switches	Applicable auto switch model		
	D-A9□/D-A9□V	**D-F9□/D-F9□V**	**D-F9□W/D-F9□WV D-F9BAL**
1	5	5	5
2	10	5	10

Theoretical Force

(N)

Action	Bore size (mm)	Operating pressure (MPa)		
		0.3	0.5	0.7
Spring return (S)	**ø6**	4.99	10.7	16.3
	ø10	16.7	32.4	48.1
	ø16	45.6	86.3	126
	ø20	73	136	199
	ø25	119	218	316
	ø32	207	368	529
Spring extend (T)	**ø6**	2.86	7.10	11.3
	ø10	12.9	26.1	39.3
	ø16	37.2	71.8	106
	ø20	58	111	164
	ø25	95	178	260
	ø32	173	312	450

Refer p.5.6-4 for reactive force of spring return.

Weight/( ): With D-A90

Unit: g

Model	Stroke (mm)		
	5	10	15
C(D)U6-□S,T	22(27)	25(35)	28(38)
C(D)U10-□S,T	36(41)	40(50)	48(58)
C(D)U16-□S,T	50(75)	56(86)	71(101)
C(D)U20-□S,T	95(128)	106(143)	133(170)
C(D)U25-□S,T	176(230)	193(252)	235(294)
C(D)U32-□S,T	262(335)	286(364)	347(425)

∗Refer to p.5.3-75 for weight of auto switch.

Tightening Torque

Refer to p.2.1-11 for mounting of CU single acting style.

Order Made

Made to Order

Refer to p.5.4-1 for made to order specifications of CU series.

⚠ Precautions

Be sure to read before handling.
Refer to p.0-39 to 0-46 for Safety Instructions and common precaution.

Applicable Auto Switch

Reed switch

Model No.	Electrical entry (Function)		Page
D-A90	Grommet	2 wire, In-line	5.3-19
D-A93			
D-A96		3 wire, In-line	5.3-19
D-A90V		2 wire, Perpendicular	5.3-20
D-A93V			
D-A96V		3 wire, Perpendicular	5.3-20

D-9□ auto switches are attachable. Refer to p.5.3-21 and 5.3-22 for further information of D-90, D-90A, D-93A and D-97.

Solid state switch

Model No.	Electrical entry (Function)		Page
D-F9N	Grommet	3 wire, NPN In-line	5.3-39
D-F9P		3 wire, PNP In-line	5.3-39
D-F9B		2 wire, In-line	5.3-39
D-F9NW		3 wire, NPN In-line (2 colour)	5.3-66
D-F9PW		3 wire, PNP In-line (2 colour)	5.3-66
D-F9BW		2 wire, In-line (2 colour)	5.3-66
D-F9NV		3 wire, NPN Perpendicular	5.3-39
D-F9PV		3 wire, PNP Perpendicular	5.3-39
D-F9BV		2 wire, Perpendicular	5.3-39
D-F9NWV		3 wire, NPN Perpendicular (2 colour)	5.3-66
D-F9PWV		3 wire, PNP Perpendicular (2 colour)	5.3-66
D-F9BWV		2 wire, Perpendicular (2 colour)	5.3-66
D-F9BAL		2 wire, In-line (2 colour, water resistant)	5.3-67

Construction

Single acting/Spring return

ø6

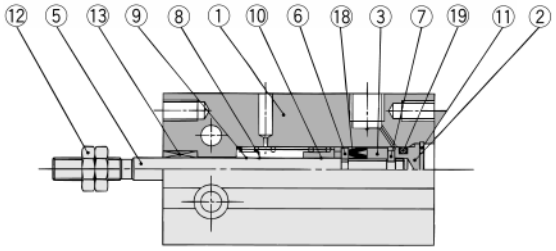

ø10

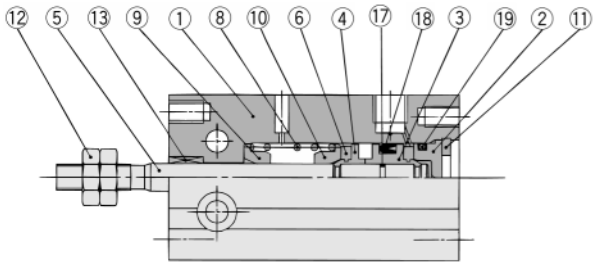

ø16 to ø32

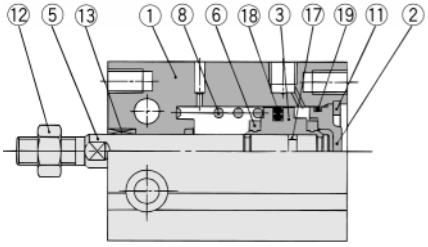

With auto switch

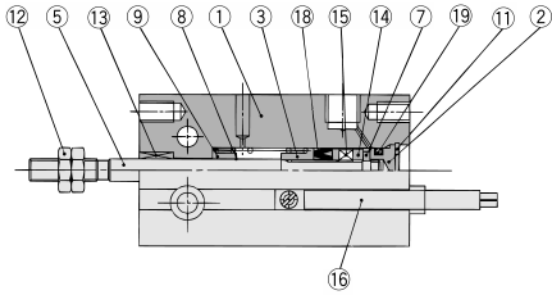

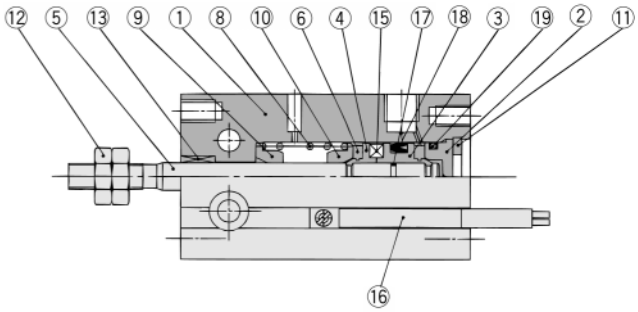

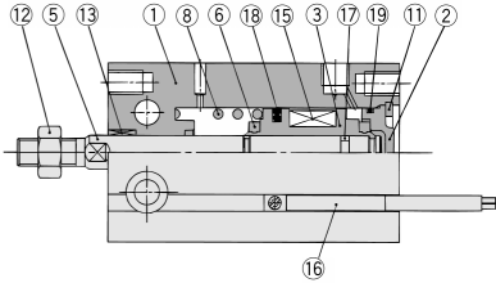

Component Parts

No.	Description	Material	Note
①	Cylinder tube	Aluminum alloy	Hard anodized
②	Head cover	Brass	ø6 to ø10, Electroless nickel plated
		Aluminum alloy	ø16 to ø32, White chromated
③	Piston	Brass	ø6 to ø10
		Aluminum alloy	ø16 to ø32, Chromated
④	Piston	Brass	ø10
⑤	Piston rod	Stainless steel	
⑥	Bumper A	Urethane	
⑦	Bumper B	Urethane	
⑧	Return spring	Piano wire	Zinc chromated

No.	Description	Material	Note
⑨	Spring seat	Brass	
⑩	Spring seat	Brass	
⑪	Snap ring	Stainless steel	Phosphate coating
⑫	Rod end nut	Urethane	Nickel plated
⑬	Bushing	Piano wire	
⑭	Magnet holder	Brass	ø6
⑮	Magnet	Hard anodized	
⑯	Auto switch	——	
⑰	Piston gasket	NBR	
⑱*	Piston seal		
⑲*	Gasket		

Replacement Parts

No.	Description	Material	Bore size/Parts No.				
			ø10	**ø16**	**ø20**	**ø25**	**ø32**
⑱*	Piston seal	NBR	MYP-10A	NLP-16L	NLP-20L	NLP-25L	NLP-32L
⑲*	Gasket		ø10 X ø8 X ø1	ø16 X ø14 X ø1	C18	C22	C29

*Consult SMC when seals of bore size 6 is replaced.

Construction

Single acting/Spring extend

With auto switch

ø6

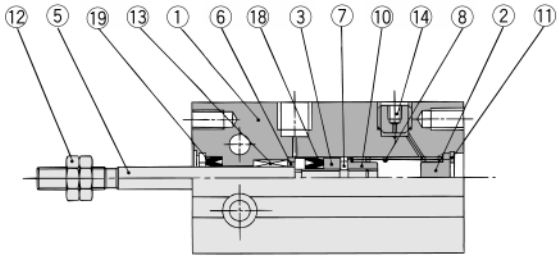

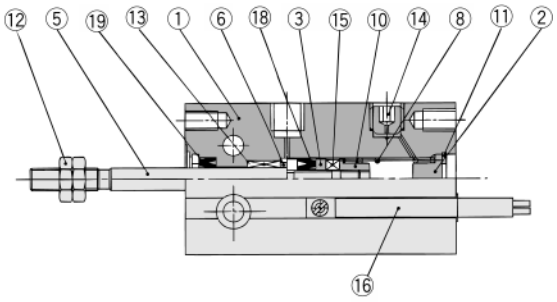

ø10

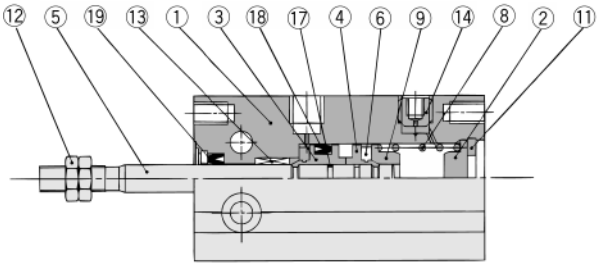

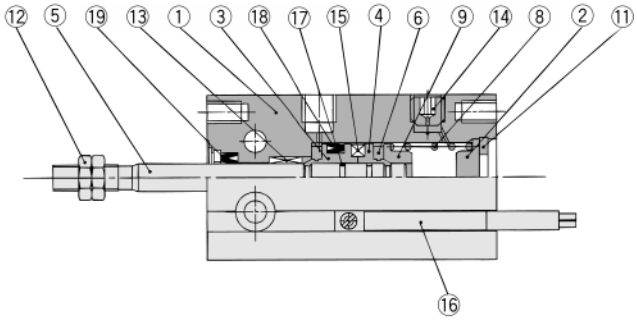

ø16 to ø32

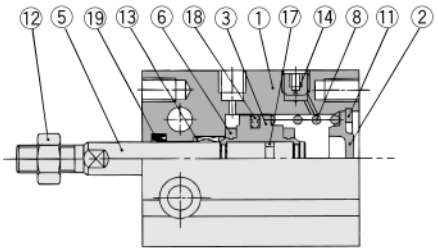

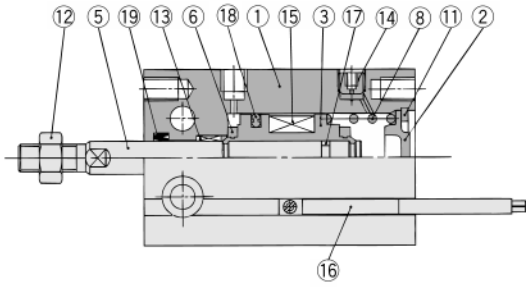

Component Parts

No.	Description	Material	Note
①	Cylinder tube	Aluminum alloy	Hard anodized
②	Head cover	Brass	ø6 to ø10, Electroless nickel plated
		Aluminum alloy	ø16 to ø32, White chromated
③	Piston	Brass	ø6 to ø10
		Aluminum alloy	ø16 to ø32, Chromated
④	Piston	Brass	ø10
⑤	Piston rod	Stainless steel	
⑥	Bumper A	Urethane	
⑦	Bumper B	Urethane	
⑧	Return spring	Piano wire	Zinc chromated
⑨	Spring seat	Brass	

No.	Description	Material	Note
⑩	Stopper	Brass	ø6
⑪	Snap ring	Carbon tool steel	Phosphate coating
⑫	Rod end nut	Carbon steel	Nickel plated
⑬	Bushing	Oil impregnated sintered alloy	
⑭	Plug with fixed orifice	Alloy steel	Black zinc chromated
⑮	Magnet	Magnet material	
⑯	Auto switch	—	
⑰	Piston gasket	NBR	
⑱*	Piston seal		
⑲*	Rod seal		

Replacement Parts

No.	Description	Material	Bore size/Part No.				
			ø10	ø16	ø20	ø25	ø32
⑱*	Piston seal	NBR	MYP-10A	NLP-16L	NLP-20L	NLP-25L	NLP-32L
⑲*	Rod seal		MYR-4	DYR-6K	DYR-8K	DYR-10SK	DYR-12

Dimensions/Single Acting Spring Extend

ø6, ø10

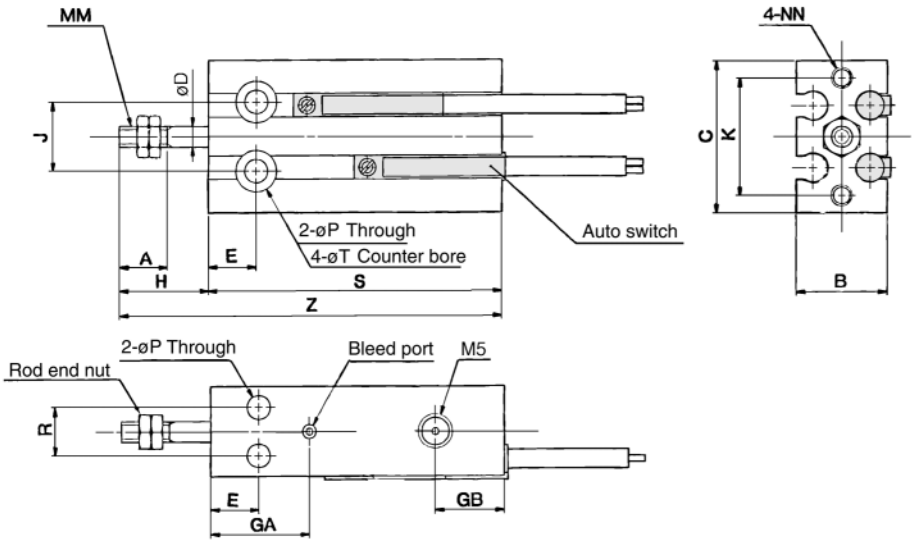

ø16 to ø32

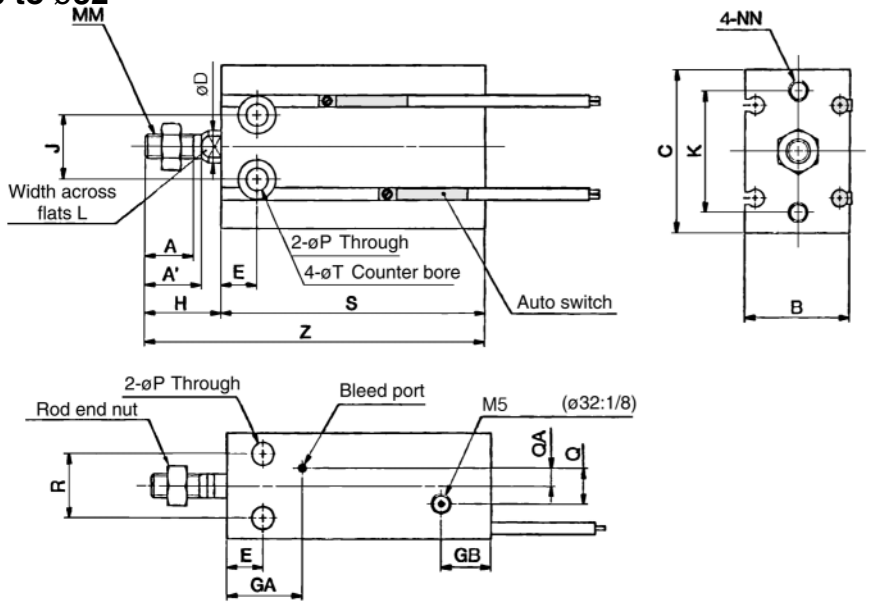

Rod end nut/Options

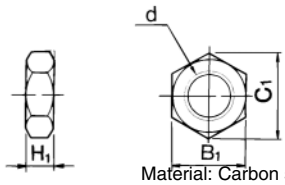

Material: Carbon steel

Part No.	Tube bore size (mm)	d	H1	B1	C1
NTP-006	**6**	M3	1.8	5.5	6.4
NTP-010	**10**	M4	2.4	7	8.1
NTJ-015A	**16**	M5	4	8	9.2
NT-015A	**20**	M6	5	10	11.5
NT-02	**25**	M8	5	13	15.0
NT-03	**32**	M10 X 1.25	6	17	19.6

(mm)

Bore (mm)	A	A'	B	C	D	E	GA	GB	H	J	K	L	MM	NN	P	Q	QA	R	T
6	7	–	13	22	3	7	15	10	13	10	17	–	M3	M3 Depth5	3.2	–	–	7	6 Depth4.8
10	10	–	15	24	4	7	16.5	10	16	11	18	–	M4	M3 Depth5	3.2	–	–	9	6 Depth5
16	11	12.5	20	32	6	7	16.5	11.5	16	14	25	5	M5	M4 Depth6	4.5	4	2	12	7.6 Depth6.5
20	12	14	26	40	8	9	19	12.5	19	16	30	6	M6	M5 Depth8	5.5	9	4.5	16	9.3 Depth8
25	15.5	18	32	50	10	10	21.5	13	23	20	38	8	M8	M5 Depth8	5.5	9	4.5	20	9.3 Depth9
32	19.5	22	40	62	12	11	23	12.5	27	24	48	10	M10 X 1.25	M6 Depth9	6.6	13.5	4.5	24	11 Depth11.5

Bore (mm)	Without auto switch						With auto switch					
	S			Z			S			Z		
	5st	10st	15st	5st	10st	15st	5st	10st	15st	5st	10st	15st
6	38	43	48	51	56	61	38	43	48	51	56	61
10	41	46	56	57	62	72	41	46	56	57	62	72
16	35	40	50	51	56	66	45	50	60	61	66	76
20	41	46	56	60	65	75	51	56	66	70	75	85
25	45	50	60	68	73	83	55	60	70	78	83	93
32	47	52	62	74	79	89	57	62	72	84	89	99

Dimensions/Single Acting Spring Return

ø6, ø10

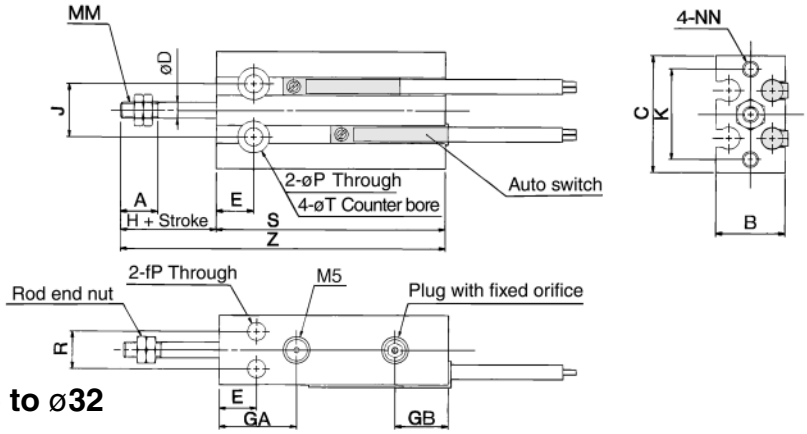

ø16 to ø32

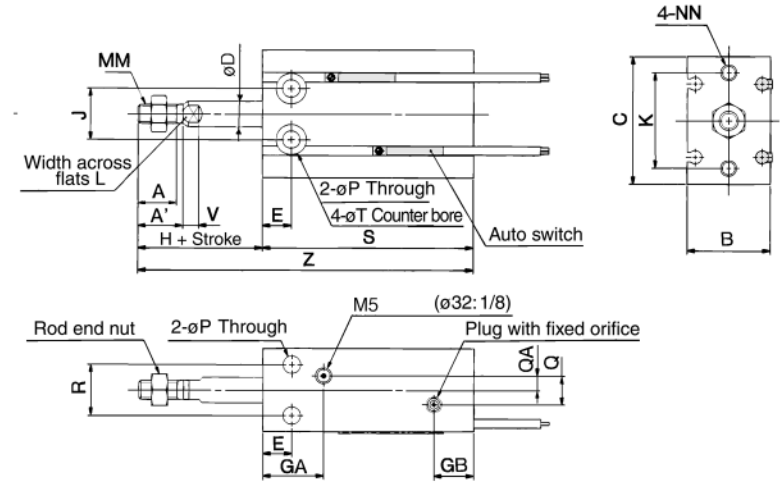

Rod end nut/Options

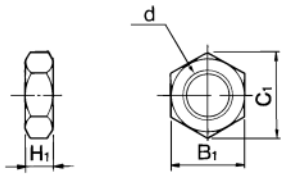

Material: Carbon steel

Part No.	Tube bore size (mm)	d	H1	B1	C1
NTP-006	**6**	M3	1.8	5.5	6.4
NTP-010	**10**	M4	2.4	7	8.1
NTJ-015A	**16**	M5	4	8	9.2
NT-015A	**20**	M6	5	10	11.5
NT-02	**25**	M8	5	13	15.0
NT-03	**32**	M10 X 1.25	6	17	19.6

(mm)

Bore (mm)	A	A'	B	C	D	E	GA	GB	H	J	K	L	MM	NN	P	Q	QA	R	T	V
6	7	–	13	22	3	7	15	10	13	10	17	–	M3	M3 Depth5	3.2	–	–	7	6 Depth4.8	–
10	10	–	15	24	4	7	16.5	10	16	11	18	–	M4	M3 Depth5	3.2	–	–	9	6 Depth5	–
16	11	12.5	20	32	6	7	16.5	11.5	16	14	25	5	M5	M4 Depth6	4.5	4	2	12	7.6 Depth6.5	3.5
20	12	14	26	40	8	9	19	12.5	19	16	30	6	M6	M5 Depth8	5.5	9	4.5	16	9.3 Depth8	5
25	15.5	18	32	50	10	10	21.5	13	23	20	38	8	M8	M5 Depth8	5.5	9	4.5	20	9.3 Depth9	5
32	19.5	22	40	62	12	11	23	12.5	27	24	48	10	M10 X 1.25	M6 Depth9	6.6	13.5	4.5	24	11 Depth11.5	5

Bore (mm)	Without auto switch						With auto switch					
	S			Z			S			Z		
	5st	10st	15st	5st	10st	15st	5st	10st	15st	5st	10st	15st
6	38	43	48	56	66	76	38	43	48	56	66	76
10	41	46	56	62	72	87	41	46	56	62	72	87
16	45	50	60	66	76	91	45	50	60	66	76	91
20	41	46	56	65	75	90	51	56	66	75	85	100
25	45	50	60	73	83	98	55	60	70	83	93	108
32	47	52	62	79	89	104	57	62	72	89	99	114

Auto Switch Mounting Position/Single Acting Spring Return

D-A9□
D-F9□

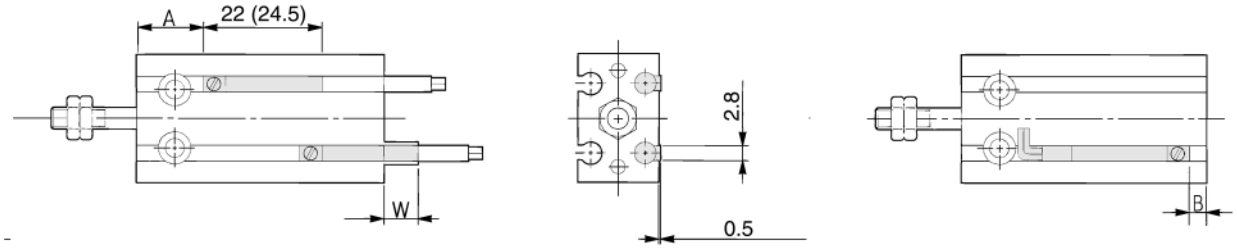

( ): D-A93

D-A9□V
D-F9□V

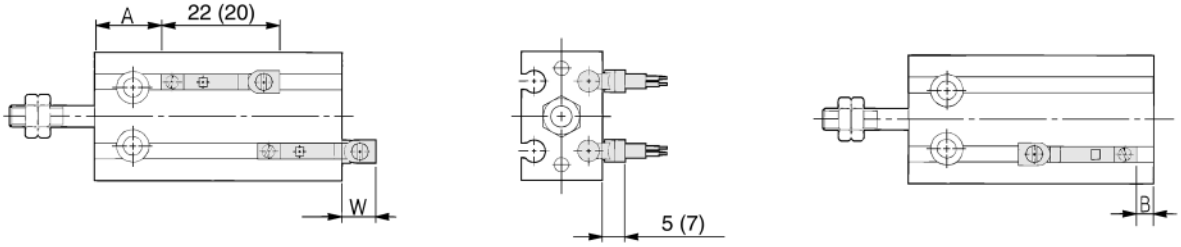

( ): D-F9□V, D-F9□WV

Single acting/Spring return

(mm)

Bore (mm)	Stroke	D-A9□/D-A9□V			D-F9N/D-F9B/D-F9P/D-F9□W			D-F9□V/D-A9□WV			D-F9BAL		
		A	B	W	A	B	W	A	B	W	A	B	W
6	All stroke	13	0	2.5(5)	17.5	4	6.5	17.5	4	4.5	16.5	3.5	16.5
10	5, 10	12	3	−1.5(1)	16.5	7.5	2.5	16.5	7.5	0.5	15.5	6.5	12.5
	15	17			21.5			21.5			20.5		
16	5, 10	15.5	3.5	−2(0.5)	20	8	2	20	8	0	19	7	12
	15	20.5			25			25			24		
20	5, 10	19.5	5.5	−4(−1.5)	24	10	0	24	10	−2	23	9	10
	15	24.5			29			29			28		
25	5, 10	22	7	−5.5(−3)	27.5	11.5	−1.5	27.5	11.5	−3.5	25.5	10.5	8.5
	15	27			32.5			32.5			30.5		
32	5, 10	23	8	−6.5(−4)	28.5	12.5	−2.5	28.5	12.5	−4.5	26.5	11.5	7.5
	15	28			33.5			33.5			31.5		

Note 1) Negative figures of the table show dimensions mounted inside cylinder body.
Note 2) In the case of the 5mm stroke or the 10mm stroke, there are times in which the switch will not turn OFF or 2 switches will turn ON simultaneously due to their movement range. Therefore, set the position approximately 1 to 4mm outward from the values given in the table above. Then, perform an operation inspection to make sure that the switches operate normally (if 1 switch is used, make sure that it turns ON and OFF properly; if 2 switches are used, make sure that both switches turn ON).
Note 3) Figures in ( ) are for D-A93.

Auto Switch Mounting Position/Single Acting Spring Extend

D-A9□
D-F9□

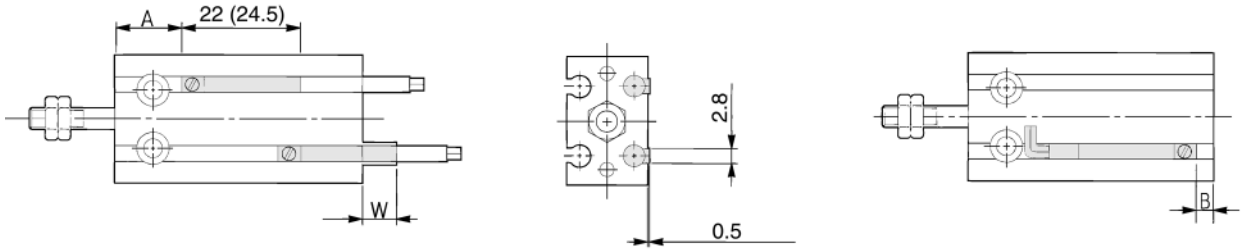

( ): D-A93

D-A9□V
D-F9□V

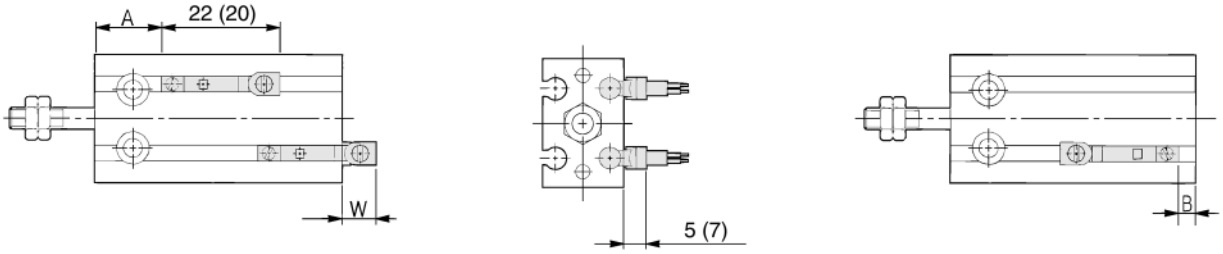

( ): D-F9□V, D-F9□WV

Single acting/Spring extend

(mm)

Bore (mm)	Stroke	D-A9□/D-A9□V			D-F9N/D-F9B/D-F9P/D-F9□W			D-F9□V/D-F9□WV			D-F9BAL		
		A	B	W	A	B	W	A	B	W	A	B	W
6	All stroke	11	1	0.5(3)	15.5	5.5	9	15.5	5.5	2.5	14.5	4.5	14.5
10	5,10	12	3	–1.5(1)	16.5	7.5	7	16.5	7.5	0.5	15.5	6.5	12.5
	15		8	–6.5(–4)		12.5	2		12.5	–4.5		11.5	7.5
16	5,10	15.5	3.5	–2(0.5)	20	8	6.5	20	8	0	19	7	12
	15		8.5	–7(–4.5)		13	1.5		13	–5		12	7
20	5,10	19.5	5.5	–4(–1.5)	24	10	4.5	24	10	–2	23	9	10
	15		10.5	–9(–6.5)		15	–0.5		15	–7		14	5
25	5,10	22	7	–5.5(–3)	27.5	11.5	3	27.5	11.5	–3.5	25.5	10.5	8.5
	15		12	–10.5(–8)		16.5	–2		16.5	–8.5		15.5	3.5
32	5,10	23	8	–6.5(–4)	28.5	12.5	2	28.5	12.5	–4.5	26.5	11.5	7.5
	15		13	–11.5(–9)		17.5	–3		17.5	–9.5		16.5	2.5

Note 1) Negative figures of the table show dimensions mounted inside cylinder body.
Note 2) In the case of the 5mm stroke or the 10mm stroke, there are times in which the switch will not turn OFF or 2 switches will turn ON simultaneously due to their movement range. Therefore, set the position approximately 1 to 4mm outward from the values given in the table above. Then, perform an operation inspection to make sure that the switches operate normally (if 1 switch is used, make sure that it turns ON and OFF properly; if 2 switches are used, make sure that both switches turn ON).
Note 3) Figures in ( ) are for D-A93.

Free Mount Cylinder/Non-rotating Rod: Double Acting Single Rod

Series CUK

ø6, ø10, ø16, ø20, ø25, ø32

How to Order

Standard □ CUK 6 — 30 D

With auto switch □ CDUK 6 — 30 D — A90 □

Thread Port (ø32)

—	Rc(PT)
E	G(PF)

Built-in magnet

Non-rotating rod

Bore size

6	6mm
10	10mm
16	16mm
20	20mm
25	25mm
32	32mm

Stroke (mm)

ø6, ø10, ø16	5, 10, 15, 20, 25, 30
ø20, ø25, ø32	5, 10, 15, 20, 25, 30, 40, 50

Action

D	Double acting

Auto switch

—	Without auto switch

Refer to the table below for auto switch model no.

Number of auto switches

—	2
S	1

These auto switches have been changed
Contact SMC or view www.smcworld.com

F9N➡**M9N**	F9NV➡**M9NV**
F9P➡**M9P**	F9PV➡**M9PV**
F9B➡**M9B**	F9BV➡**M9BV**

Applicable Auto Switches/Refer to p.5.3-2 for further information on auto switches.

Style	Special function	Electrical entry	Indicator	Wiring (Output)	Load voltage			Model		Lead wire*(m)			Applicable load	
					DC		AC	Perp.	In-line	0.5 (—)	3 (L)	5 (Z)		
Reed switch	—	Grommet	No	2 wire	24V	5V 12V	≤ 100V	**A90V**	**A90**	●	●	—	IC	Relay, PLC
			Yes			12V	100V	**A93V**	**A93**	●	●	—	—	
				3 wire (Equiv. NPN)	—	5V	—	**A96V**	**A96**	●	●	—	IC	
Solid state switch	—	Grommet	Yes	3 wire (NPN)	24V	12V	—	**F9NV**	**F9N**	●	●	—	—	Relay, PLC
				3 wire (PNP)				**F9PV**	**F9P**	●	●	—		
				2 wire				**F9BV**	**F9B**	●	●	—		
	Diagnostic (2 colour)			2 wire (NPN)				**F9NWV**	**F9NW**	●	●	○		
				2 wire (PNP)				**F9PWV**	**F9PW**	●	●	○		
				2 wire				**F9BWV**	**F9BW**	●	●	○		
	Water resistant (2 colour)							—	**F9BA**	—	●	○		

*Lead wire length 0.5m····· – (Example)A93
3m····· L (Example)A93L
5m····· Z (Example)F9NWZ

*Solid state switches marked with a "○" are manufactured upon receipt of order.



JIS symbol
Double acting/Single rod

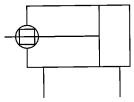

Specifications

Bore size (mm)	ø6	ø10	ø16	ø20	ø25	ø32
Fluid	Air					
Proof pressure	1.05MPa					
Max. operating pressure	0.7MPa					
Min. operating pressure	0.15MPa	0.10MPa		0.08MPa		
Ambient and fluid temperature	Without auto switch: –10°C to 70°C With auto switch : –10°C to 60°C (No freezing)					
Lubrication	Not required (Non-lube)					
Operating piston speed	50 to 500mm/s					
Cushion	Rubber bumper					
Rod end thread	Male thread					
Thread tolerance	JIS class 2					
Stroke tolelance	$^{+1.0}_{0}$mm					
Non-rotating accuracy (1)	±0.8°			±0.5°		

Note 1) No load: at rod extended end

Standard Stroke

(mm)

Bore size (mm)	Standard stroke(mm)	
ø6, ø10, ø16	5, 10, 15, 20, 25, 30	Refer to p.2.1-45 for long stroke
ø20, ø25, ø32	5, 10, 15, 20, 25, 30, 40, 50	

Minimum Strokes for Auto Switch Mounting

(mm)

Number of auto switches	Applicable auto switch model		
	D-A9□/D-A9□V	**D-F9□/D-F9□V**	**D-F9□W/D-F9□WV D-F9BAL**
1	5	5	5
2	10	5	10

Weight/( ): With D-A90

(mm)

Bore size (mm)	Stroke(mm)							
	5	10	15	20	25	30	40	50
C(D)UK6-□D	28 (33)	31 (41)	34 (44)	37 (47)	40 (50)	43 (53)	–	–
C(D)UK10-□D	43 (48)	47 (57)	51 (61)	55 (65)	59 (69)	63 (73)	–	–
C(D)UK16-□D	60 (85)	66 (96)	72 (102)	78 (108)	84 (114)	90 (120)	–	–
C(D)UK20-□D	113 (147)	124 (164)	136 (176)	148 (188)	160 (200)	172 (211)	195 (235)	219 (260)
C(D)UK25-□D	212 (266)	229 (288)	246 (305)	263 (322)	280 (339)	297 (356)	335 (390)	370 (424)
C(D)UK32-□D	331 (404)	357 (435)	383 (461)	409 (487)	435 (513)	461 (539)	513 (591)	565 (643)

Refer to p.5.3-75 for auto switch weight.

Allowable Rotating Torque

Bore size (mm)	ø6	ø10	ø16	ø20	ø25	ø32
Allowable rotating torque (Nm)	0.0015	0.02	0.04	0.10	0.15	0.20

Tightening Torque

Refer to p.2.1-11 for mountiong of CUK series.

Auto Switch Mounting Position

Refer to p.2.1-16 for auto switch mounting position of CDUK series. Specifications are same as standard double acting single rod type.

Theoretical Force

Refer to p2.1-12. Specifications are same as CU series double acting single rod style.

Made to Order

Refer to p.5.4-1 for made to order specification of CUK series.

⚠ Precautions

Be sure to read before handling. Refer to p.0-39 to 0-46 for Safety Instructions and common precautions.

Cautions on Use

⚠ Caution

① **Do not place your fingers in the clearance between the non-rotating plate and the cylinder tube.**
Your fingers could get caught between the non-rotating plate and the cylinder tube when the piston rod retracts. Therefore, never place your finger in this area. Because the cylinder outputs a great force, it could lead to injury if precautions are not taken to prevent your fingers from getting caught.

② When using the non-rotating style, make sure that rotational torque is not applied to the piston rod. If rotational torque must be applied due to unavoidable circumstances, make sure to use it at the allowable rotational torque or less, which is shown in the table on the right.

Copper Free

20-CUK | **Bore size** | — | **Stroke** | **D**

● **Copper free**

To prevent the generation of copper ions in order to eliminate any influences of copper ions or fluororesins on colour CRTs, copper materials have been electroless nickel plated or replaced with non-copper materials.

Min. Operating Pressure

(MPa)

Bore size(mm)	ø6	ø10, ø16	ø20, ø25, ø32
Min. operating press.	0.15	0.10	0.08

Specifications

Action	Double acting single rod style
Bore size (mm)	ø6, ø10, ø16, ø20, ø25, ø32
Max. operating pressure	1.05MPa
Cushion	Rubber bumper
Stroke	Same as standard model (Refer to p.2.1-32.)
Auto switch	Attachable

Construction

ø6

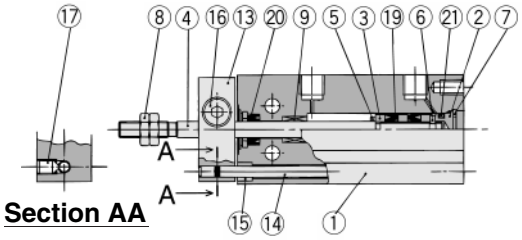

Section AA

With auto switch

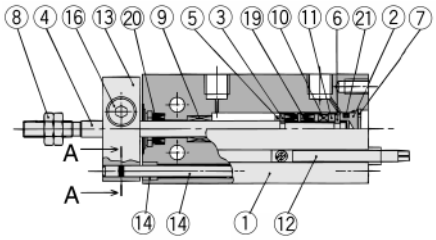

ø10

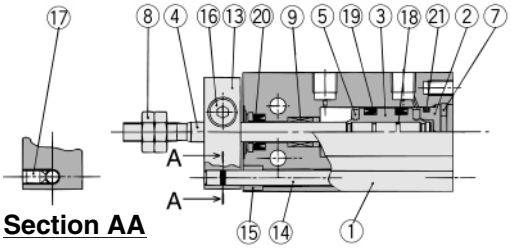

Section AA

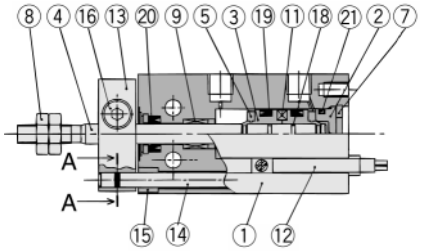

ø16 to ø32

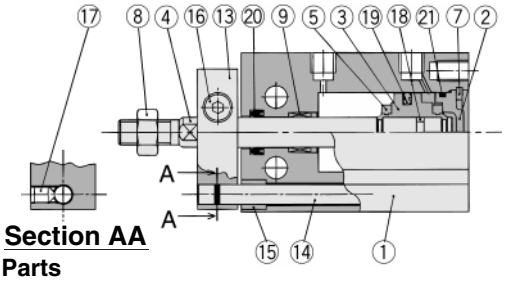

Section AA

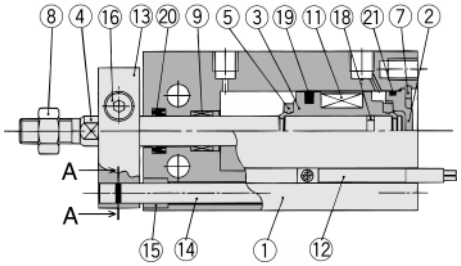

Component Parts

No.	Description	Material	Note
①	Cylinder tube	Aluminum alloy	Hard anodized
②	Head cover	Brass	ø6 to ø10, Electroless nickel plated
		Aluminum alloy	ø16 to ø32, White chromated
③	Piston	Brass	ø6 to ø10,
		Aluminum alloy	ø16 to ø32, Chromated
④	Piston rod	Stainless steel	
⑤	Bumper A	Urethane	
⑥	Bumper B	Urethane	
⑦	Snap ring	Carbon tool steel	Phosphate coating
⑧	Rod end nut	Carbon steel	Nickel plated
⑨	Bushing	Oil impregnated sintered alloy	
⑩	Magnet holder	Brass	ø6

No.	Description	Material	Note
⑪	Magnet	Magnet material	
⑫	Auto switch	———	
⑬	Non-rotating plate	Aluminum alloy	Nickel plated
⑭	Guide rod	Stainless steel	
⑮	Bushing	Oil impregnated sintered alloy	
⑯	Hex. socket head cap screw	Carbon steel	Black zinc chromated
⑰	Hex. socket head cap snap ring	Carbon steel	Black zinc chromated
⑱	Piston gasket	NBR	
⑲*	Piston seal		
⑳*	Rod seal		
㉑*	Gasket		

Replacemt Parts: Seal Kits

Bore size (mm)	Kits No.	Contents
ø10	CU10D-PS	Kits include items ⑲, ⑳ and ㉑ from the table above.
ø16	CU16D-PS	
ø20	CU20D-PS	
ø25	CU25D-PS	
ø32	CU32D-PS	

Seal kits consist of items ⑲, ⑳ and ⑳ contained in one kit, and can be ordered using the order number for each respective tube bore size.

Dimensions/Non-rotating Rod: Double Acting Single Rod

ø6, ø10

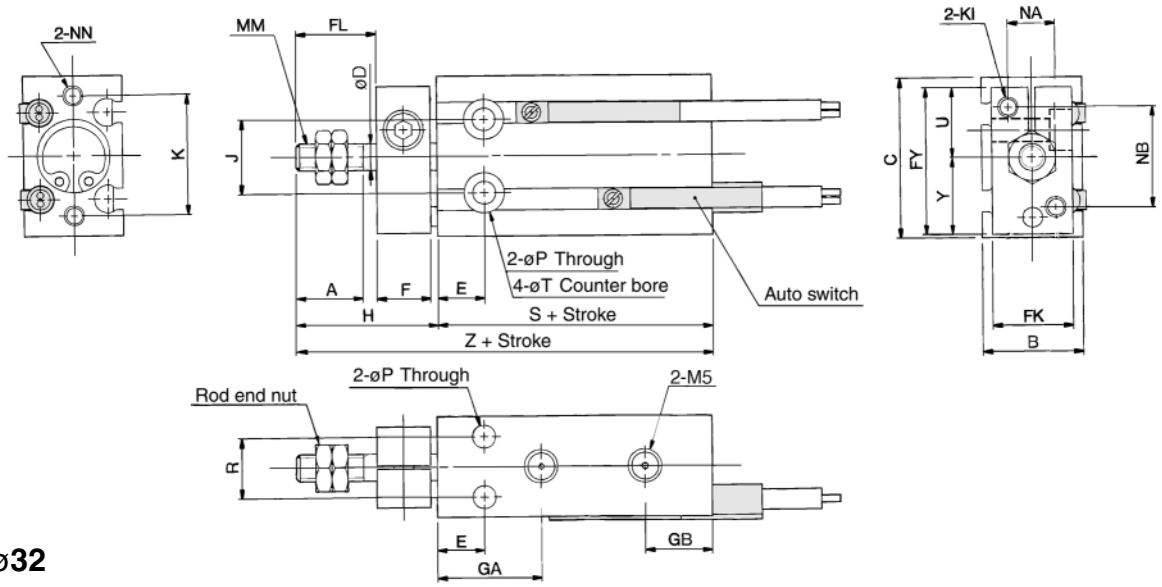

ø16 to ø32

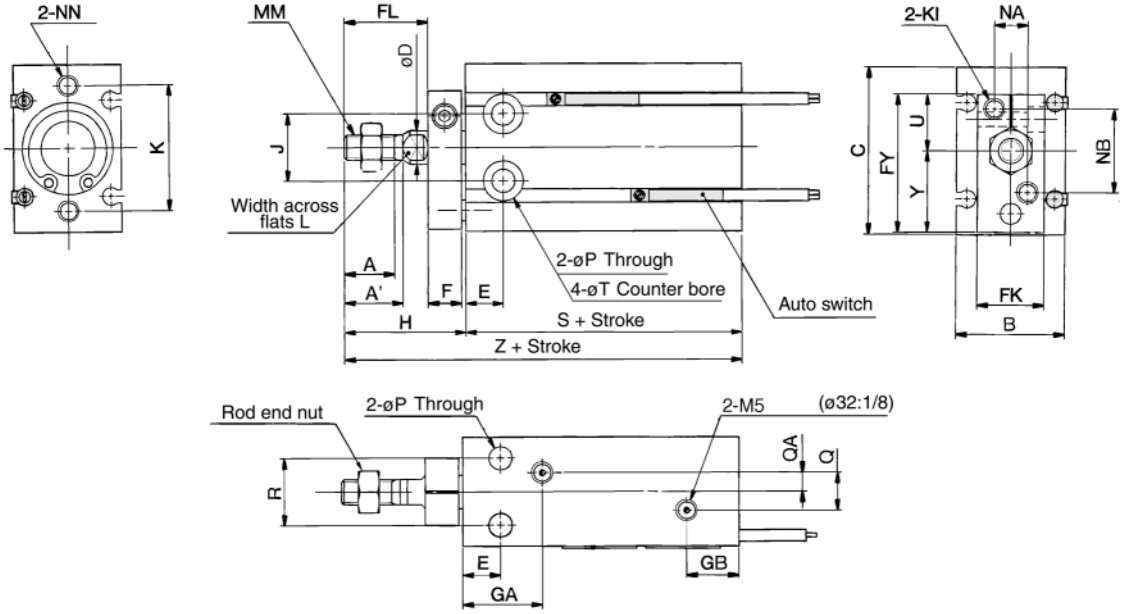

Rod end nut/Options

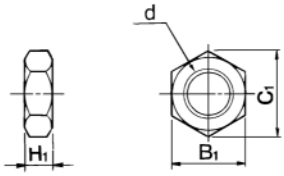

Material: Carbon steel

Part No.	Tube bore size (mm)	d	H1	B1	C1
NTP-006	**6**	M3	1.8	5.5	6.4
NTP-010	**10**	M4	2.4	7	8.1
NTJ-015A	**16**	M5	4	8	9.2
NT-015A	**20**	M6	5	10	11.5
NT-02	**25**	M8	5	13	15.0
NT-03	**32**	M10 X 1.25	6	17	19.6

(mm)

Bore (mm)	A	A'	B	C	D	E	F	FL	FK	FY	GA	GB	H	J	K	KI	L	MM
6	7	–	13	22	3	7	8	9	11	20.5	15	10	18	10	17	M3	–	M3
10	10	–	15	24	4	7	8	12	12	22	16.5	10	21	11	18	M3	–	M4
16	11	12.5	20	32	6	7	8	17	13	28	16.5 (1)	11.5	26	14	25	M4	5	M5
20	12	14	26	40	8	9	8	20	16	33	19	12.5	29	16	30	M4	6	M6
25	15.5	18	32	50	10	10	10	22	20	43.5	21.5	13	33	20	38	M5	8	M8
32	19.5	22	40	62	12	11	12	29	24	51.5	23	12.5	42	24	48	M5	10	M10 X 1.25

Bore (mm)	NA	NB	NN	P	Q	QA	R	T	U	Y	W/o auto switch		W/ auto switch	
											S	Z	S	Z
6	6	14	M3 Depth5	3.2	–	–	7	6 Depth4.8	10	10.5	33	51	33	51
10	7	15	M3 Depth5	3.2	–	–	9	6 Depth5	10.5	11.5	36	57	36	57
16	6	18	M4 Depth6	4.5	4	2	12	7.6 Depth6.5	12.5	15.5	30	56	40	66
20	8	20	M5 Depth8	5.5	9	4.5	16	9.3 Depth8	13.5	19.5	36	65	46	75
25	10	28	M5 Depth8	5.5	9	4.5	20	9.3 Depth9	19	24.5	40	73	50	83
32	12	32	M6 Depth9	6.6	13.5	4.5	24	11 Depth11.5	21	30.5	42	84	52	94

Note 1) 5 stroke (CUK16-5D): GA=14.5

Free Mount Cylinder/Non-rotating Rod: Double Acting Double Rod

Series CUKW

ø6, ø10, ø16, ø20, ø25, ø32

How to Order

Standard □ CUKW 6 — 30 D

With auto switch □ CDUKW 6 — 30 D — A90 □

Thread Port (ø32)

—	Rc(PT)
E	G(PF)

Built-in magnet

Non-rotating rod

Double rod

Bore size

6	6mm
10	10mm
16	16mm
20	20mm
25	25mm
32	32mm

Stroke (mm)

ø6, ø10, ø16	5, 10, 15, 20, 25, 30
ø20, ø25, ø32	5, 10, 15, 20, 25, 30, 40, 50

Action

D	Double acting

Double acting

—	Without auto switch

Refer to the table below for auto switch model no.

Number of auto switches

—	2
S	1

These auto switches have been changed
Contact SMC or view www.smcworld.com

F9N➡**M9N**	F9NV➡**M9NV**
F9P➡**M9P**	F9PV➡**M9PV**
F9B➡**M9B**	F9BV➡**M9BV**

Applicable Auto Switches/Refer to p.5.3-2 for further information on auto switches.

Style	Special function	Indicator	Indicator	Wiring (Output)	Load voltage			Model		Lead wire (m)*			Applicable load	
					DC		AC	Perp.	In-line	0.5 (—)	3 (L)	5 (Z)		
Reed switch	—	Grommet	No	2 wire	24V	5V 12V	≤ 100V	**A90V**	**A90**	●	●	—	IC	Relay, PLC
			Yes			12V	100V	**A93V**	**A93**	●	●	—	—	
				3 wire (Equiv. NPN)	—	5V	—	**A96V**	**A96**	●	●	—	IC	
Solid state switch	—	Grommet	Yes	3 wire (NPN)	24V	12V	—	**F9NV**	**F9N**	●	●	—	—	Relay, PLC
				3 wire (PNP)				**F9PV**	**F9P**	●	●	—		
				2 wire				**F9BV**	**F9B**	●	●	—		
	Diagnostic (2 colour)			3 wire (NPN)				**F9NWV**	**F9NW**	●	●	○		
				3 wire (PNP)				**F9PWV**	**F9PW**	●	●	○		
				2 wire				**F9BWV**	**F9BW**	●	●	○		
	Water resistant (2 colour)							—	**F9BA**	—	●	○		

*Lead wire length 0.5m ····· — (Example) A93 5m ····· Z (Example) F9NWZ
3m ····· L (Example) A93L

*Solid state switches marked with a "○" are manufactured upon receipt of order.



Specifications

Bore size (mm)	ø6	ø10	ø16	ø20	ø25	ø32
Fluid	Air					
Proof pressure	1.05MPa					
Max. operating pressure	0.7MPa					
Min. operating pressure	0.18MPa	0.13MPa		0.11MPa		
Ambient and fluid temperature	Without auto switch: –10°C to 70°C With auto switch : –10°C to 60°C (No freezing)					
Lubrication	Not required (Non-lube)					
Operating piston speed	50 to 500 mm/s					
Cushion	Rubber bumper					
Rod end thread	Male thread					
Thread tolerance	JIS class 2					
Stroke torelance	$^{+1.0}_{0}$ mm					
Non-rotating accuracy (1)	±0.8°			±0.5°		

Note 1) No load: Non-rotating plate side at rod extended end

Standard Stroke

(mm)

Bore size (mm)	Standard stroke (mm)
ø6, ø10, ø16	5, 10, 15, 20, 25, 30
ø20, ø25, ø32	5, 10, 15, 20, 25, 30, 40, 50

JIS symbol
Non-rotating rod

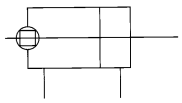

Minimum Strokes for Auto Switch Mounting

(mm)

Number of auto switches	Applicable auto switch model		
	D-A9□/D-A9□V	**D-F9□/D-F9□V**	**D-F9□W/D-F9□WV D-F9BAL**
1	5	5	5
2	10	5	10

Weight/( ): With D-A90

Unit: g

Model	Stroke (mm)							
	5	10	15	20	25	30	40	50
C(D)UKW6-□D	33 (38)	36 (46)	40 (50)	43 (53)	46 (56)	50 (60)	–	–
C(D)UKW10-□D	51 (56)	56 (66)	60 (70)	65 (75)	69 (79)	74 (84)	–	–
C(D)UKW16-□D	84 (109)	91 (121)	98 (128)	105 (135)	112 (142)	119 (149)	–	–
C(D)UKW20-□D	150 (185)	163 (203)	177 (217)	191 (231)	205 (245)	219 (259)	246 (286)	275 (315)
C(D)UKW25-□D	276 (330)	296 (355)	316 (375)	336 (395)	357 (416)	377 (436)	421 (476)	462 (516)
C(D)UKW32-□D	434 (507)	465 (543)	495 (573)	526 (604)	556 (634)	587 (665)	669 (747)	709 (787)

Refer to p.5.3-75 for auto switch weight.

Made to Order

Refer to p.5.4-1 for made to order specification of CUKW series.

⚠ Precautions

Be sure to read before handling. Refer to p.0-39 to 0-46 for Safety Instructions and common precautions.

Auto Switch Mounting Position

Refer to p.2.1-21 for auto switch mounting position of CUKW series. The specifications are same as double acting double rod style.

Theoretical Force

Refer to p.2.1-18. The specifications are same as double acting double rod style (CUW series).

Allowable Rotating Toque

Make sure that rotational torque is not applied to the piston rod of the CUKW series cylinder. If rotational torque must be applied due to unavoidable circumstances, refer to p.2.1-32.

Tightening Torque

Refer to p.2.1-11 for mounting of CUKW series.

Construction

ø6

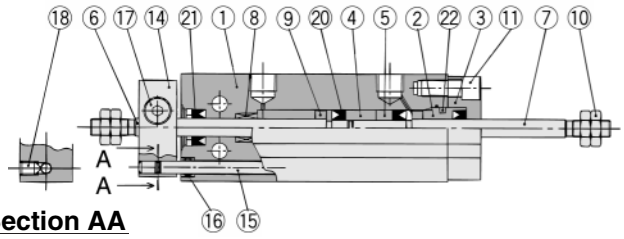

Section AA

With auto switch

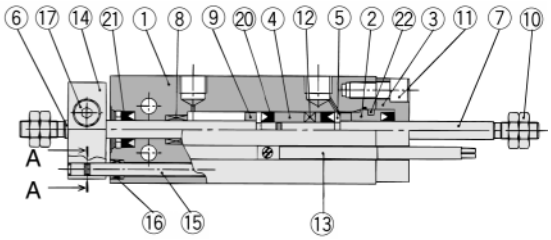

ø10

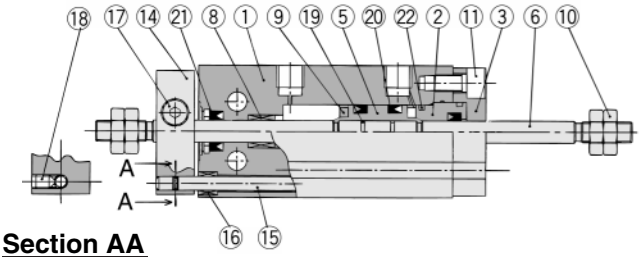

Section AA

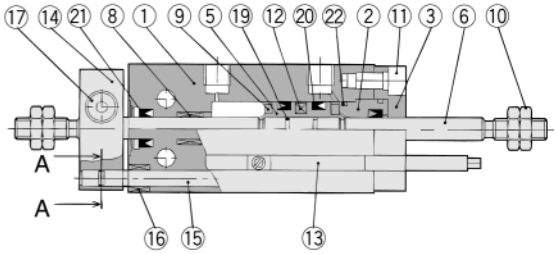

ø16 to ø32

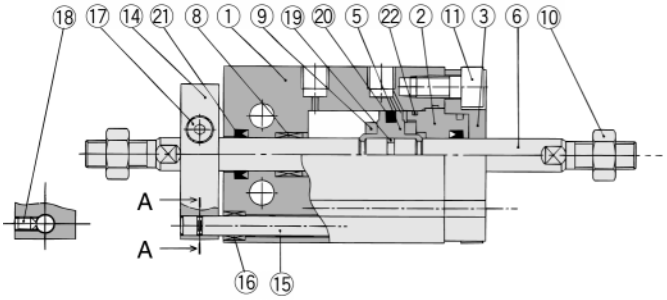

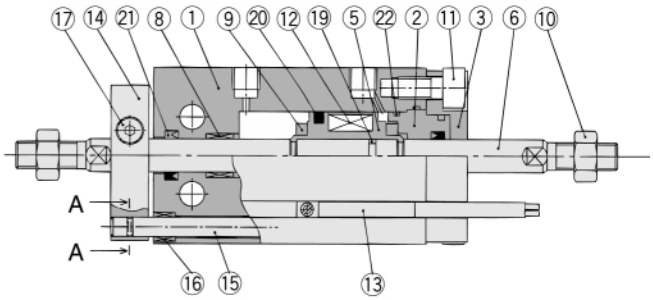

Component Parts

No.	Description	Material	Note
①	Cylinder	Aluminum alloy	Hard anodized
②	Rod cover	Aluminum bearing alloy	Chromated
③	Rod cover retainer	Aluminum alloy	Hard anodized
④	Piston	Brass	ø6
⑤	Piston	Brass	ø6, ø10
		Aluminum alloy	ø16 to ø32, Chromated
⑥	Piston rod	Stainless steel	
⑦	Piston rod	Stainless steel	ø6
⑧	Bushing	Oil impregnated sintered alloy	
⑨	Bumper	Urethane	
⑩	Rod end nut	Carbon steel	Nickel plated
⑪	Hex. socket head cap screw	Carbon steel	Nickel plated

No.	Description	Material	Note
⑫	Magnet	Magnet material	
⑬	Auto switch	———	
⑭	Non-rotating plate	Magnet material	Nickel plated
⑮	Guide rod	Stainless steel	
⑯	Bushing	Oil impregnated sintered alloy	
⑰	Hex. socket head cap screw	Carbon steel	Black zinc chromated
⑱	Hex. socket head snap ring	Carbon steel	Black zinc chromated
⑲	Piston gasket	NBR	
⑳	Piston seal		
㉑	Rod seal		
㉒	Gasket		

Replacement Parts

No.	Description	Material	Bore size/Part No.					
			ø6	**ø10**	**ø16**	**ø20**	**ø25**	**ø32**
⑳	Piston seal	NBR	MYP-6A	MYP-10A	PPD-16	PPD-20	PPD-25	PPD-32
㉑	Rod seal		MYR-3	MYR-4	DYR-6K	DYR-8K	DYR-10SK	DYR-12
㉒	Gasket		ø7 X ø5 X ø1	ø10 X ø8 X ø1	ø16 X ø14 X ø1	C18	C22	C29

Dimensions/Non-rotating Rod: Double Acting Double Rod

ø6, ø10

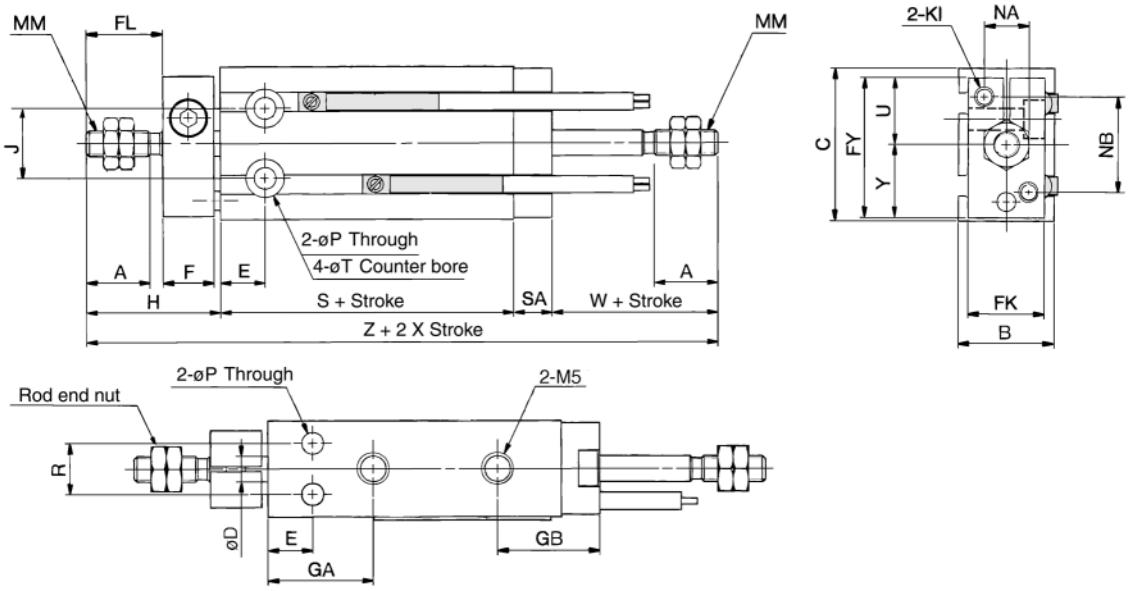

ø16 to ø32

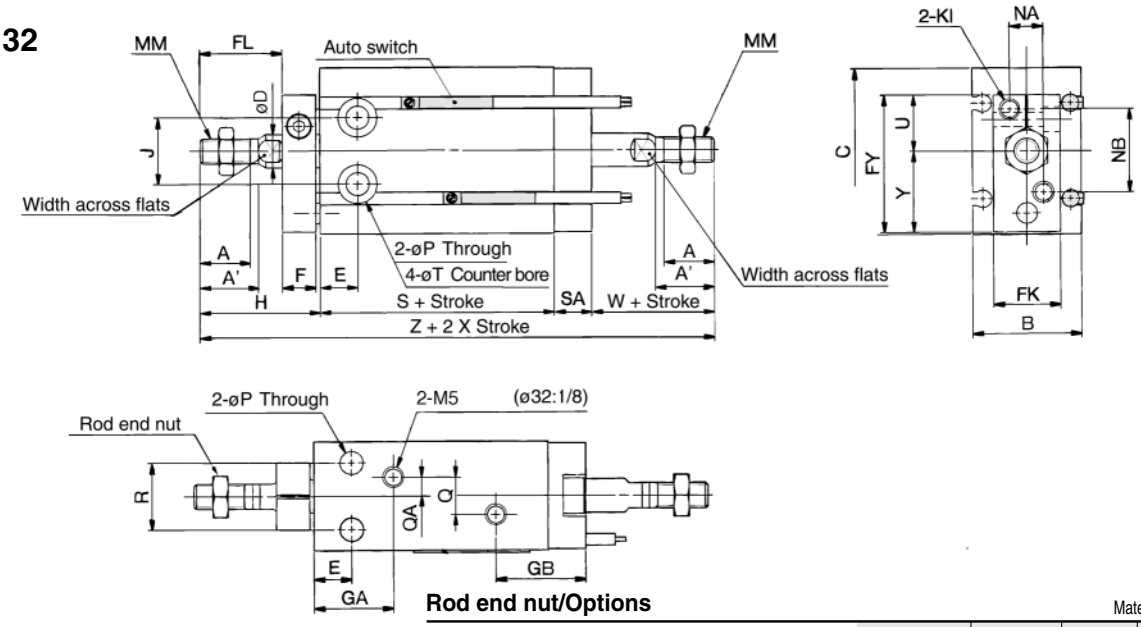

Rod end nut/Options

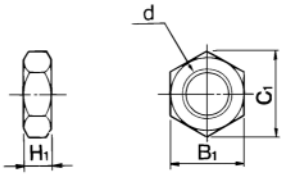

Material: Carbon steel

Part No.	Tube bore size (mm)	d	H1	B1	C1
NTP-006	**6**	M3	1.8	5.5	6.4
NTP-010	**10**	M4	2.4	7	8.1
NTJ-015A	**16**	M5	4	8	9.2
NT-015A	**20**	M6	5	10	11.5
NT-02	**25**	M8	5	13	15.0
NT-03	**32**	M10 X 1.25	6	17	19.6

Bore (mm)	A	A'	B	C	D	E	F	FL	FK	FY	GA	GB	H	J	KI	L	MM	NA
6	7	–	13	22	3	7	8	9	11	20.5	15	16	18	10	M3	–	M3	6
10	10	–	15	24	4	7	8	12	12	22	16.5	16	21	11	M3	–	M4	7
16	11	12.5	20	32	6	7	8	17	13	28	16.5(1)	19	26	14	M4	5	M5	6
20	12	14	26	40	8	9	8	20	16	33	19	21.5	29	16	M4	6	M6	8
25	15.5	18	32	50	10	10	10	22	20	43.5	21.5	22	33	20	M5	8	M8	10
32	19.5	22	40	62	12	11	12	29	24	51.5	23	22.5	42	24	M5	10	M10 X 1.25	12

Bore (mm)	NB	P	Q	QA	R	SA	T	U	W	Y	W/o auto switch		W/ auto switch	
											S	Z	S	Z
6	14	3.2	–	–	7	6	6 Depth4.8	10	13	10.5	38	75	38	75
10	15	3.2	–	–	9	6	6 Depth5	10.5	16	11.5	36	79	36	79
16	18	4.5	4	2	12	7.5	7.6 Depth6.5	12.5	16	15.5	30	79.5	40	89.5
20	20	5.5	9	4.5	16	9	9.3 Depth8	13.5	19	19.5	36	93	46	103
25	28	5.5	9	4.5	20	9	9.3 Depth9	19	23	24.5	40	105	50	115
32	32	6.6	13.5	4.5	24	10	11 Depth11.5	21	27	30.5	42	121	52	131

Note 1) 5 stroke (CUKW16-5D): GA=14.5

Free Mount Cylinder/Non-rotating Rod: Single Acting Spring Return/Extend

Series CUK

ø6, ø10, ø16, ø20, ø25, ø32

How to Order

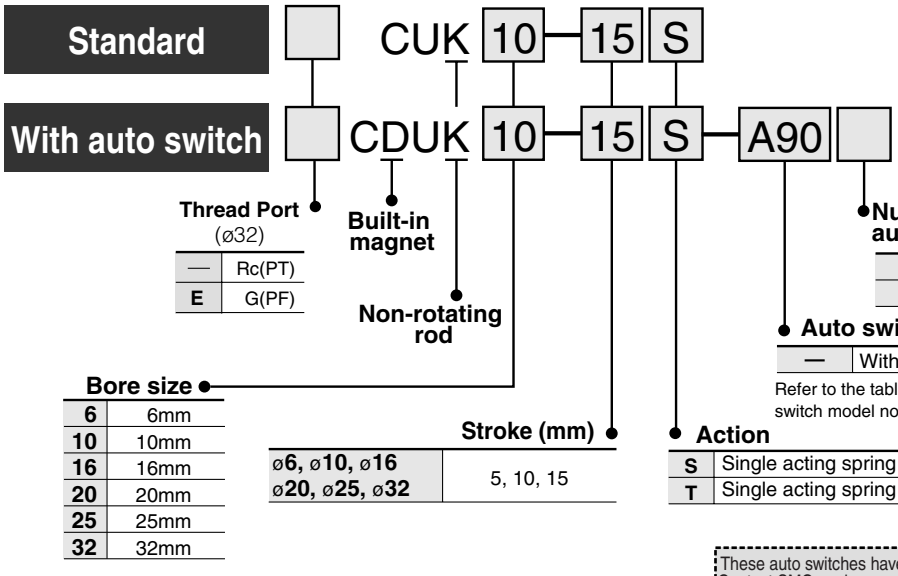

Thread Port (ø32)

—	Rc(PT)
E	G(PF)

Built-in magnet

Non-rotating rod

Number of auto switches

—	2
S	1

Auto switch

—	Without auto switch

Refer to the table below for auto switch model no.

Bore size

6	6mm
10	10mm
16	16mm
20	20mm
25	25mm
32	32mm

Stroke (mm)

ø6, ø10, ø16 ø20, ø25, ø32	5, 10, 15

Action

S	Single acting spring return
T	Single acting spring extend

These auto switches have been changed
Contact SMC or view www.smcworld.com

F9N➡**M9N**	F9NV➡**M9NV**
F9P➡**M9P**	F9PV➡**M9PV**
F9B➡**M9B**	F9BV➡**M9BV**

Applicable Auto switches/Refer to p.5.3-2 for further information on auto switches.

Style	Special function	Electrical entry	Indicator	Wiring (Output)	Load voltage			Model		Lead wire (m)*			Applicable load	
					DC		AC	Perp.	In-line	0.5 (—)	3 (L)	5 (Z)		
Reed switch	—	Grommet	No	2 wire	24V	5V 12V	≤ 100V	**A90V**	**A90**	●	●	—	IC	Relay, PLC
			Yes			12V	100V	**A93V**	**A93**	●	●	—	—	
				3 wire (Equiv. NPN)	—	5V	—	**A96V**	**A96**	●	●	—	IC	
Solid state switch	—	Grommet	Yes	3 wire (NPN)	24V	12V	—	**F9NV**	**F9N**	●	●	—	—	Relay, PLC
				3 wire (PNP)				**F9PV**	**F9P**	●	●	—		
				2 wire				**F9BV**	**F9B**	●	●	—		
	Diagnostic (2 colour)			3 wire (NPN)				**F9NWV**	**F9NW**	●	●	○		
				3 wire (PNP)				**F9PWV**	**F9PW**	●	●	○		
				2 wire				**F9BWV**	**F9BW**	●	●	○		
	Water resistant (2 colour)							—	**F9BA**	—	●	○		

∗Lead wire length 0.5m····· — (Example) A93 5m····· Z (Example) F9NWZ
3m····· L (Example) A93L
∗Solid state switches marked with a "○" are manufactured upon receipt of order.

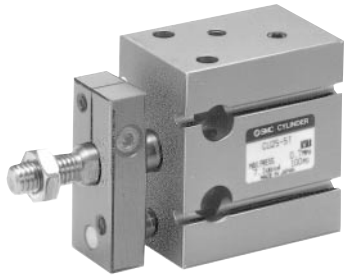

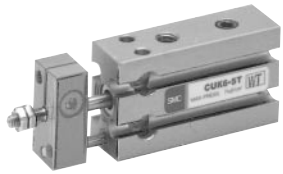

Specifications

Bore size (mm)	ø6	ø10	ø16	ø20	ø25	ø32
Fluid	Air					
Proof pressure	1.05MPa					
Max. operating pressure	0.7MPa					
Min. operating pressure	0.23MPa	0.18MPa		0.16MPa		
Ambient and fluid temperature	Without auto switch –10°C to 70°C With auto switch –10°C to 60°C (No freezing)					
Lubrication	Not required (Non-lube)					
Operating piston speed	50 to 500mm/s					
Cushion (1)	Rubber bumper					
Rod end thread	Male thread					
Thread tolerance	JIS class 2					
Stroke tolerance	$^{+1.0}_{0}$ mm					
Rod non rotating accuracy (2)	±0.8°			±0.5°		

Note 1) ø6: With auto switch, single rubber bumper
Note 2) No load: at extended end

Standard Stroke

(mm)

Bore size (mm)	Standard stroke (mm)
ø6, ø10, ø16, ø20, ø25, ø32	5, 10, 15

JIS symbol

Single acting/ Spring return

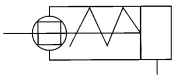

Single acting/ Spring extend

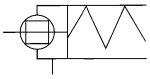

Minimum Stroke for Auto Switch Mounting

(mm)

Number of auto switches	Applicable auto switch model		
	D-A9□/D-A9□V	**D-F9□/D-F9□V**	**D-F9□W/D-F9□WV D-F9BAL**
1	5	5	5
2	10	5	10

Weight/( ): With D-A90

Unit: g

Model	Stroke (mm)		
	5	10	15
C(D)UK6-□ S/T	28 (33)	31 (41)	34 (44)
C(D)UK10-□ S/T	43 (48)	47 (57)	55 (65)
C(D)UK16-□ S/T	60 (85)	66 (90)	81 (111)
C(D)UK20-□ S/T	113 (147)	124 (164)	153 (193)
C(D)UK25-□ S/T	212 (266)	229 (288)	271 (330)
C(D)UK32-□ S/T	331 (404)	357 (435)	422 (500)

Refer to p.5.3-75 for auto switch weight.

Made to Order

Refer to p.5.4-1 for Made to Order specifications.

⚠ Precautions

Be sure to read before handling. Refer to p.0-39 to 0-46 for Safety Instructions and common precautions.

Tightening Torque

Refer to p.2.1-11 for mounting of CUK series single acting style.

Theoretical Force

Refer to p.2.1-23. Specifications are same as single acting/spring return and extend style (CU series).

Auto Switch Mounting Position

Refer to p.2.1-28 and 2.1-29. Auto switch mounting position of single acting: spring return and extend style of CDUK series is same as single acting: standard spring return and extend styles.

Allowable Tightening Torque

Make sure that rotational torque is not applied to the piston rod of the CUK Series single acting type cylinder. If rotational torque must be applied due to unavoidable circumstances, refer to p.2.1-32.

Construction

Single acting/Spring return

ø6

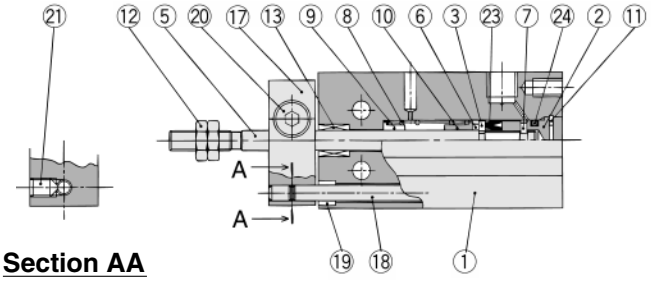

Section AA

With auto switch

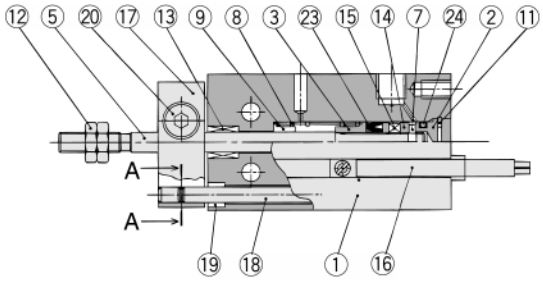

ø10

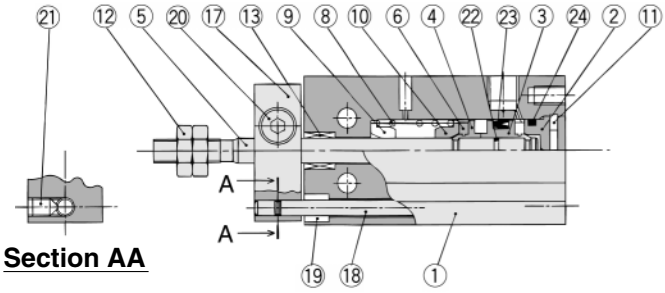

Section AA

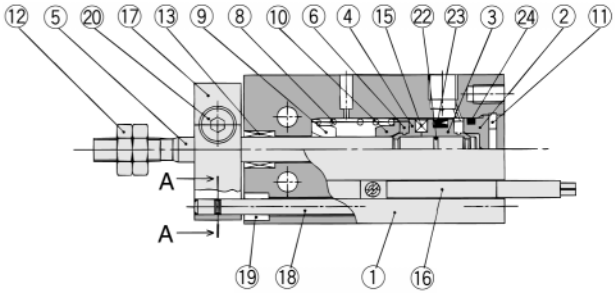

ø16 to ø32

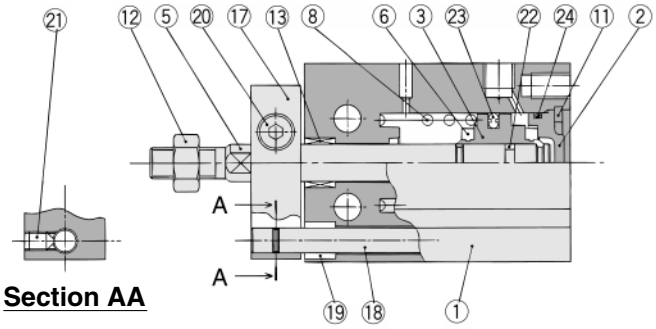

Section AA

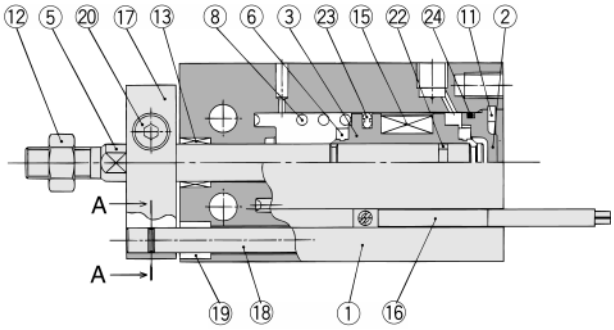

Component Parts

No.	Description	Material	Note
①	Cylinder tube	Aluminum alloy	Hard anodized
②	Head cover	Brass	ø6 to ø10, Electroless nickel plated
		Aluminum alloy	ø16 to ø32, White chromated
③	Piston	Brass	ø6 to ø10
		Aluminum alloy	ø16 to ø32, Chromated
④	Piston	Brass	ø10
⑤	Piston rod	Stainless steel	
⑥	Bumper A	Urethane	
⑦	Bumper B	Urethane	
⑧	Return spring	Piano wire	Zinc chromated
⑨	Spring seat	Brass	
⑩	Spring seat	Brass	

No.	Description	Material	Note
⑪	Snap ring	Carbon tool steel	Phosphate coating
⑫	Rod end nut	Carbon steel	Nickel plated
⑬	Bushing	Oil impregnated sintered alloy	
⑭	Magnet holder	Brass	ø6
⑮	Magnet	Magnet material	
⑯	Auto switch	———	
⑰	Non-rotating plate	Aluminum alloy	Nickel plated
⑱	Guide rod	Stainless steel	
⑲	Bushing	Oil impregnated sintered alloy	
⑳	Hex. socket head cap screw	Carbon steel	Black zinc anodized
㉑	Hex. socket head snap ring	Carbon steel	Black zinc anodized
㉒	Piston gasket	NBR	
㉓*	Piston seal		
㉔*	Gasket		

Replacement Parts

No.	Description	Material	Bore size/Part No.				
			ø10	ø16	ø20	ø25	ø32
㉓*	Piston seal	NBR	MYP-10A	NLP-16L	NLP-20L	NLP-25L	NLP-32L
㉔*	Gasket		ø10 X ø8 X ø1	ø16 X ø14 X ø1	C18	C22	C29

Construction

Single acting/Spring extend

ø6

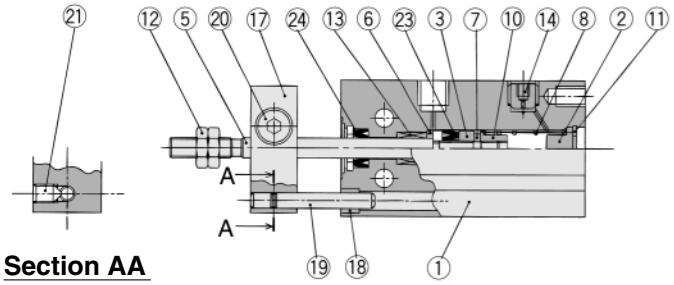

Section AA

With auto switch

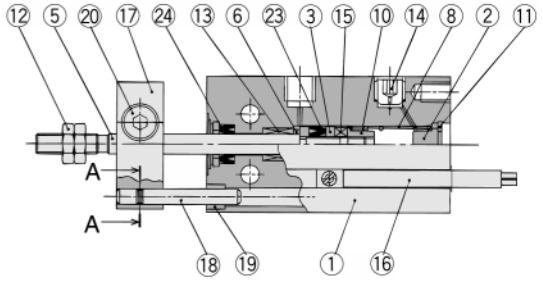

ø10

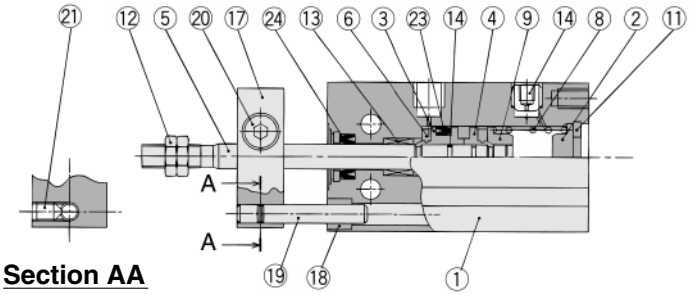

Section AA

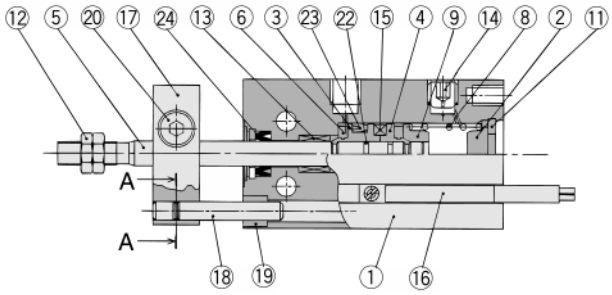

ø16 to 32

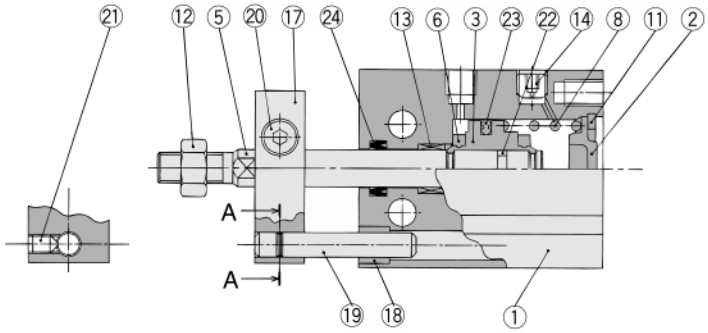

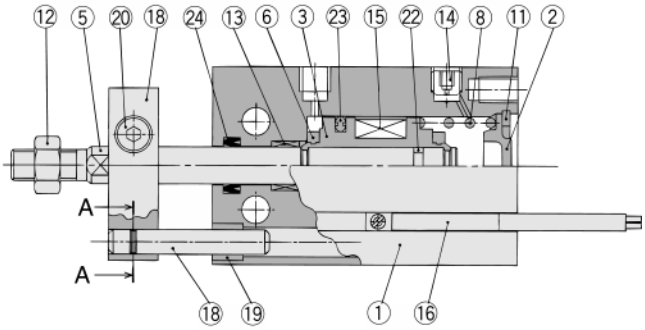

Component Parts

No.	Description	Material	Note
①	Cylinder tube	Aluminum alloy	Hard anodized
②	Head cover	Brass	ø6 to ø10, nickel plated
		Aluminum alloy	ø16 to ø32, White chromated
③	Piston	Brass	ø6 to ø10
		Aluminum alloy	ø16 to ø32, Chromated
④	Piston	Brass	ø10
⑤	Piston rod	Stainless steel	
⑥	Bumper A	Urethane	
⑦	Bumper B	Urethane	
⑧	Return spring	Piano wire	Zinc chromated
⑨	Spring seat	Brass	
⑩	Stopper	Brass	ø6
⑪	Snap ring	Carbon tool steel	Phosphate coating

No.	Description	Material	Note
⑫	Rod end nut	Carbon steel	Nickel plated
⑬	Bushing	Oil impregnated sintered alloy	
⑭	Plug with fixed orifice	Alloy steel	Black zinc chromated
⑮	Magnet	Magnet material	
⑯	Auto switch	———	
⑰	Non-rotating plate	Aluminum alloy	Black anodized
⑱	Guide rod	Stainless steel	
⑲	Bushing	Oil impregnated sintered alloy	
⑳	Hex. socket head cap screw	Carbon steel	Black zinc chromated
㉑	Hex. socket head snap ring	Carbon steel	Black zinc chromated
㉒	Piston gasket	NBR	
㉓*	Piston seal		
㉔*	Gasket		

Replacement Parts

No.	Description	Material	Bore size/Part No.				
			ø10	**ø16**	**ø20**	**ø25**	**ø32**
㉓*	Piston seal	NBR	MYP-10A	NLP-16L	NLP-20L	NLP-25L	NLP-32L
㉔*	Gasket		MYR-4	DYR-6K	DYR-8K	DYR-10SK	DYR-12

* Consult SMC when seals of ø6 are replaced.

Dimensions/Non-rotating Rod: Single Acting Spring Return

ø6, ø10

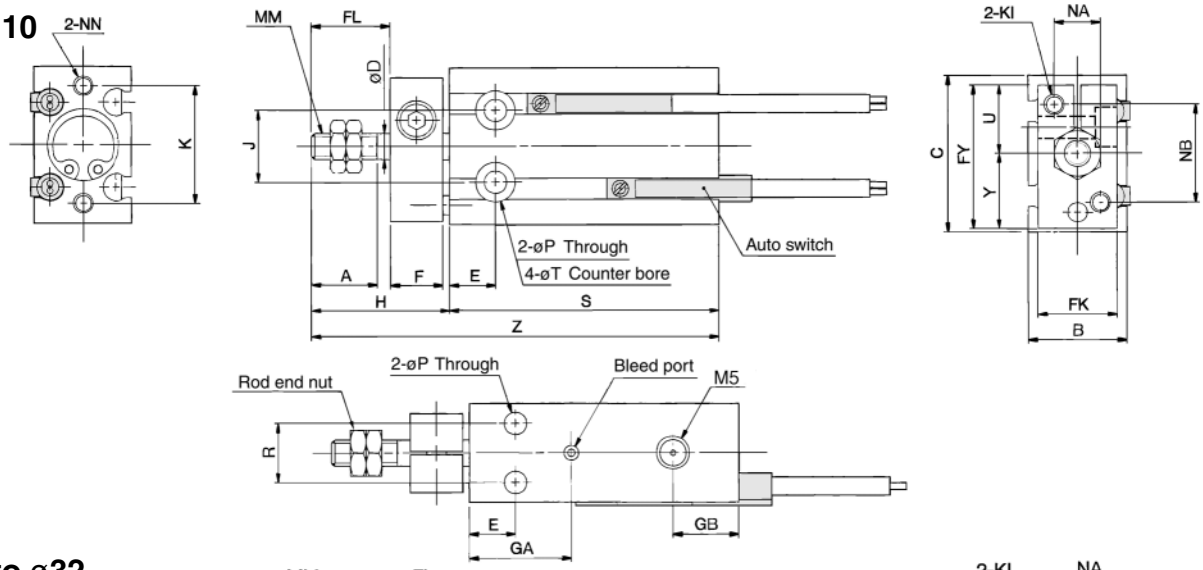

ø16 to ø32

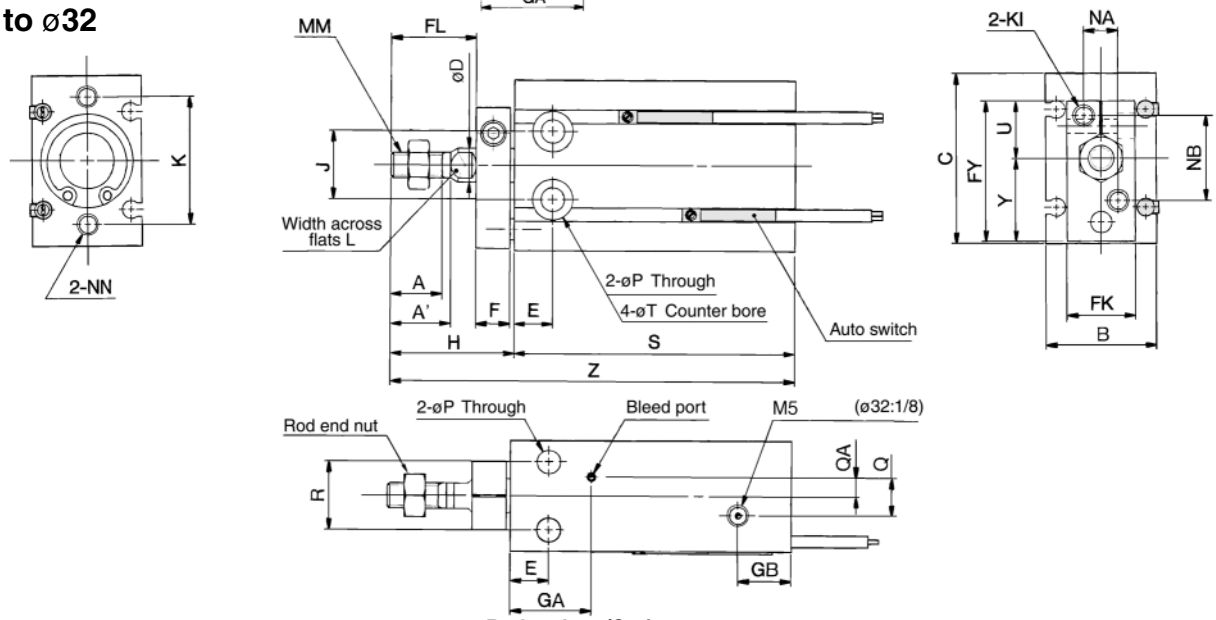

Rod end nut/Options

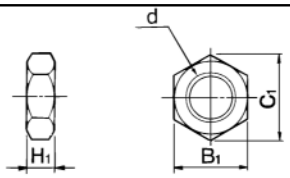

Material: Carbon steel

Part No.	Tube bore size (mm)	d	H1	B1	C1
NTP-006	**6**	M3	1.8	5.5	6.4
NTP-010	**10**	M4	2.4	7	8.1
NTJ-015A	**16**	M5	4	8	9.2
NT-015A	**20**	M6	5	10	11.5
NT-02	**25**	M8	5	13	15.0
NT-03	**32**	M10 X 1.25	6	17	19.6

Bore (mm)	A	A'	B	C	D	E	F	FL	FK	FY	GA	GB	H	J	K	KI	L	MM	NA	NB	NN
6	7	–	13	22	3	7	8	9	11	20.5	15	10	18	10	17	M3	–	M3	6	14	M3 Depth5
10	10	–	15	24	4	7	8	12	12	22	16.5	10	21	11	18	M3	–	M4	7	15	M3 Depth5
16	11	12.5	20	32	6	7	8	17	13	28	16.5	11.5	26	14	25	M4	5	M5	6	18	M4 Depth6
20	12	14	26	40	8	9	8	20	16	33	19	12.5	29	16	30	M4	6	M6	8	20	M5 Depth8
25	15.5	18	32	50	10	10	10	22	20	43.5	21.5	13	33	20	38	M5	8	M8	10	28	M5 Depth8
32	19.5	22	40	62	12	11	12	29	24	51.5	23	12.5	42	24	48	M5	10	M10 X 1.25	12	32	M6 Depth9

Bore (mm)	P	Q	QA	R	T	U	Y	Without auto switch						With auto switch					
								S			Z			S			Z		
								5st	10st	15st	5st	10st	15st	5st	10st	15st	5st	10st	15st
6	3.2	–	–	7	6 Depth4.8	10	10.5	38	43	48	56	61	66	38	43	48	56	61	66
10	3.2	–	–	9	6 Depth5	10.5	11.5	41	46	56	62	67	77	41	46	56	62	67	77
16	4.5	4	2	12	7.6 Depth6.5	12.5	15.5	35	40	50	61	66	76	45	50	60	71	76	86
20	5.5	9	4.5	16	9.3 Depth8	13.5	19.5	41	46	56	70	75	85	51	56	66	80	85	95
25	5.5	9	4.5	20	9.3 Depth9	19	24.5	45	50	60	78	83	93	55	60	70	88	93	103
32	6.6	13.5	4.5	24	11 Depth11.5	21	30.5	47	52	62	89	94	104	57	62	72	99	104	114

Dimensions/Non-rotating Rod: Single Acting Spring Extend

ø6, ø10

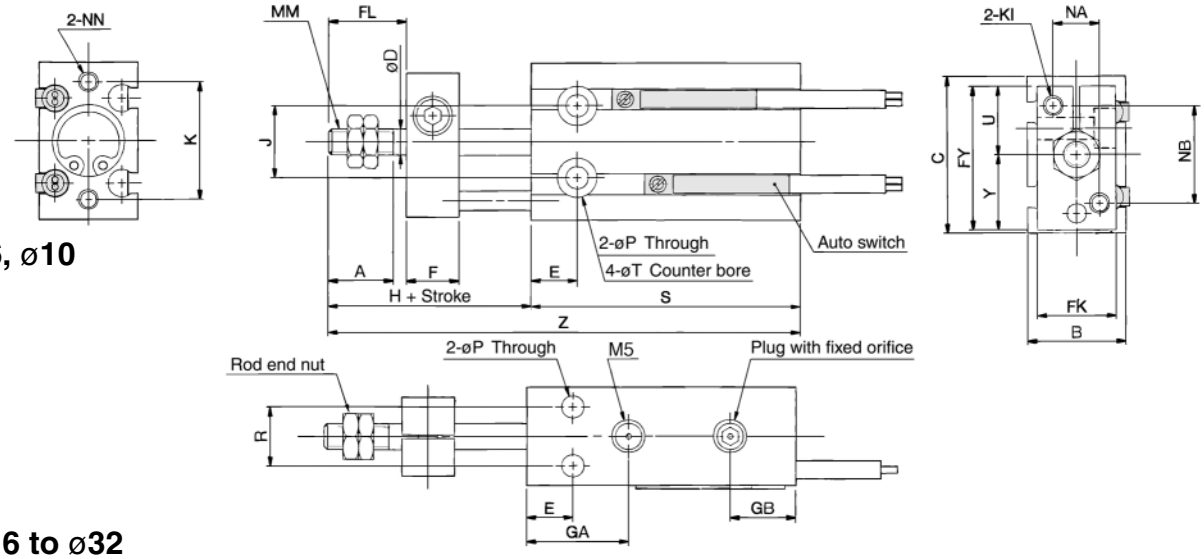

ø16 to ø32

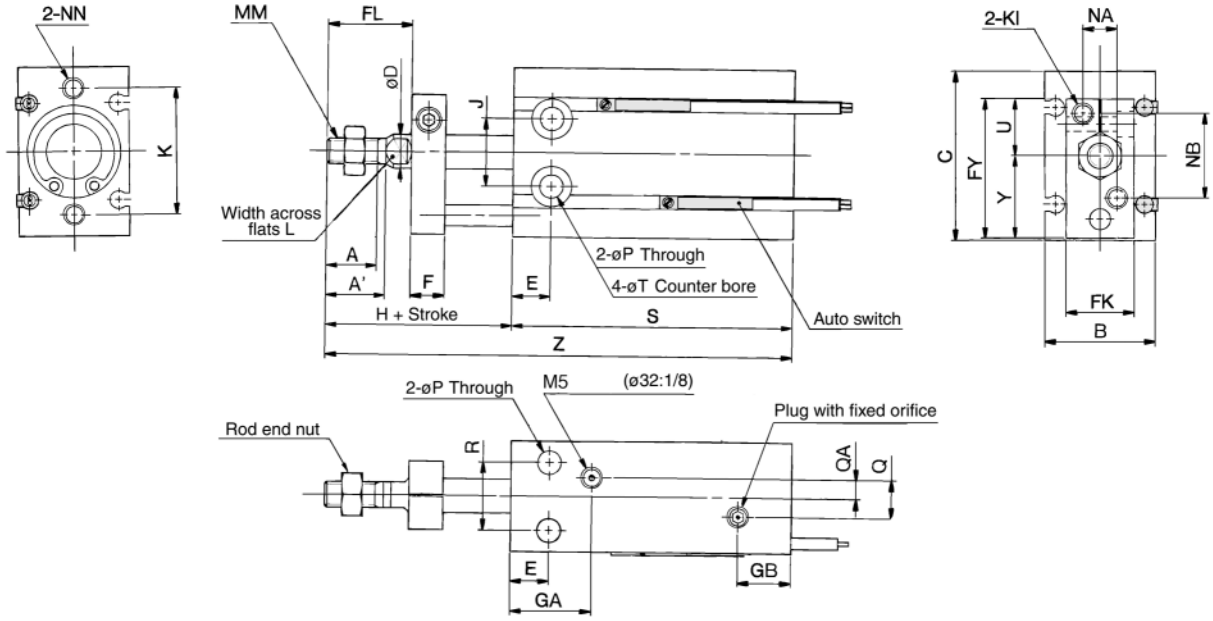

Rod end nut/Options

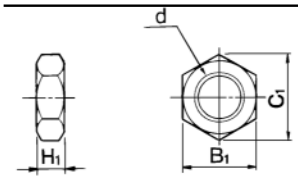

Material: Carbon steel

Part No.	Tube bore size (mm)	d	H1	B1	C1
NTP-006	**6**	M3	1.8	5.5	6.4
NTP-010	**10**	M4	2.4	7	8.1
NTJ-015A	**16**	M5	4	8	9.2
NT-015A	**20**	M6	5	10	11.5
NT-02	**25**	M8	5	13	15.0
NT-03	**32**	M10 X 1.25	6	17	19.6

Bore (mm)	A	A'	B	C	D	E	F	FL	FK	FY	GA	GB	H	J	K	KI	L	MM	NA	NB	NN
6	7	–	13	22	3	7	8	9	11	20.5	15	10	18	10	17	M3	–	M3	6	14	M3 Depth5
10	10	–	15	24	4	7	8	12	12	22	16.5	10	21	11	18	M3	–	M4	7	15	M3 Depth5
16	11	12.5	20	32	6	7	8	17	13	28	16.5	11.5	26	14	25	M4	5	M5	6	18	M4 Depth6
20	12	14	26	40	8	9	8	20	16	33	19	12.5	29	16	30	M4	6	M6	8	20	M5 Depth8
25	15.5	18	32	50	10	10	10	22	20	43.5	21.5	13	33	20	38	M5	8	M8	10	28	M5 Depth8
32	19.5	22	40	62	12	11	12	29	24	51.5	23	12.5	42	24	48	M5	10	M10 X 1.25	12	32	M6 Depth9

Bore (mm)	P	Q	QA	R	T	U	Y	Without auto switch						With auto switch					
								S			Z			S			Z		
								5st	10st	15st	5st	10st	15st	5st	10st	15st	5st	10st	15st
6	3.2	–	–	7	6 Depth4.8	10	10.5	38	43	48	61	71	81	38	43	48	61	71	81
10	3.2	–	–	9	6 Depth5	10.5	11.5	41	46	56	67	77	92	41	46	56	67	77	92
16	4.5	4	2	12	7.6 Depth6.5	12.5	15.5	45	50	60	76	86	101	45	50	60	76	86	101
20	5.5	9	4.5	16	9.3 Depth8	13.5	19.5	41	46	56	75	85	100	51	56	66	85	95	110
25	5.5	9	4.5	20	9.3 Depth9	19	24.5	45	50	60	83	93	108	55	60	70	93	103	118
32	6.6	13.5	4.5	24	11 Depth11.5	21	30.5	47	52	62	94	104	119	57	62	72	104	114	129

Free Mount Cylinder/Long Stroke: Double Acting Single Rod

Series CU

ø6, ø10, ø16, ø20, ø25, ø32

How to Order

Standard □ CU 6 – 60 D

With auto switch □ CDU 6 – 60 D – A90 □

Thread Port (ø32)

—	Rc(PT)
E	G(PF)

Built-in magnet

Bore size

6	6mm
10	10mm
16	16mm
20	20mm
25	25mm
32	32mm

Stroke (mm)

ø6, **ø10**, **ø16**	40, 50, 60
ø20, **ø25**, **ø32**	60, 70, 80, 90, 100

Action

D	Double acting

Number of auto switch

—	2
S	1

Auto switch

—	Without auto switch

Refer to the table below for auto switch model no.

These auto switches have been changed
Contact SMC or view www.smcworld.com

F9N➡**M9N** F9NV➡**M9NV**
F9P➡**M9P** F9PV➡**M9PV**
F9B➡**M9B** F9BV➡**M9BV**

Applicable Auto switches/Refer to p.5.3-2 for further specifications on auto switches.

Style	Special function	Electrical entry	Indicator	Wiring (Output)	Load voltage DC	Load voltage DC	Load voltage AC	Model Perp.	Model In-line	Lead wire* (m) 0.5 (–)	Lead wire* (m) 3 (L)	Lead wire* (m) 5 (Z)	Applicable load	
Reed switch	—	Grommet	No	2 wire	24V	5V 12V	≤ 100V	**A90V**	**A90**	●	●	—	IC	Relay, PLC
			Yes	2 wire		12V	100V	**A93V**	**A93**	●	●	—	—	
				3 wire (Equiv. NPN)	—	5V	—	**A96V**	**A96**	●	●	—	IC	
Solid state switch	—	Grommet	Yes	3 wire (NPN)	24V	12V	—	**F9NV**	**F9N**	●	●	—	—	Relay, PLC
				3 wire (PNP)				**F9PV**	**F9P**	●	●	—		
				2 wire				**F9BV**	**F9B**	●	●	—		
	Diagnostic (2 colour)			3 wire (NPN)				**F9NWV**	**F9NW**	●	●	○		
				3 wire (PNP)				**F9PWV**	**F9PW**	●	●	○		
				2 wire				**F9BWV**	**F9BW**	●	●	○		
	Water resistant (2 colour)							—	**F9BA**	—	●	○		

∗Lead wire length 0.5m ····· – (Example) A93 5m ····· Z (Example) F9NWZ
3m ····· L (Example) A93L

∗Solid state switch marked with a "○" are manufactured upon receipt of order.

⚠ Precautions

Be sure to read before handling. Refer to p.0-39 to 0-46 for Safety Instructions and common precautions.

Auto Switch Mounting Position

Refer to p.2.1-21 for mounting position of CDU long stroke series. Specifications are same as standard double acting single rod style.

Tightening Torque

Refer to p.2.1-11 for mounting of long stroke style.

Theoretical Force

Refer to p.2.1-12. Specifications are same as CU series double acting single rod style.



Specifications

Bore size (mm)	ø6	ø10	ø16	ø20	ø25	ø32
Fluid	Air					
Proof pressure	1.05MPa					
Max. operating pressure	0.7MPa					
Min. operating pressure	0.12MPa	0.06MPa		0.05MPa		
Ambient and fluid temperature	Without auto switch: –10°C to 70°C (No freezing) With auto switch : –10°C to 60°C					
Lubrication	Not required (non-lube)					
Operating piston speed	50 to 500mm/s					
Cushion	Rubber bumper					
Rod end thread	Male thread					
Thread tolerance	JIS class 2					
Stroke tolerance	$^{+1.0}_{0}$mm					

Standard Stroke

(mm)

Bore size (mm)	Standard stroke(mm)
ø6, ø10, ø16	40, 50, 60
ø20, ø25, ø32	60, 70, 80, 90, 100

Weight/( ): D-A90

Unit: g

Model	Stroke (mm)						
	40	50	60	70	80	90	100
C(D)U6-□D	43 (53)	49 (59)	50 (65)	–	–	–	–
C(D)U10-□D	64 (74)	72 (82)	80 (90)	–	–	–	–
C(D)U16-□D	92 (122)	104 (134)	116 (146)	–	–	–	–
C(D)U20-□D	–	–	216 (253)	238 (275)	260 (297)	282 (319)	304 (341)
C(D)U25-□D	–	–	363 (422)	397 (456)	431 (490)	465 (524)	499 (558)
C(D)U32-□D	–	–	526 (604)	574 (652)	622 (700)	670 (748)	718 (796)

∗Refer to p.5.3-75 for auto switch weight.

JIS symbol
Double acting/Single rod

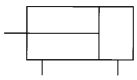

Construction

ø6

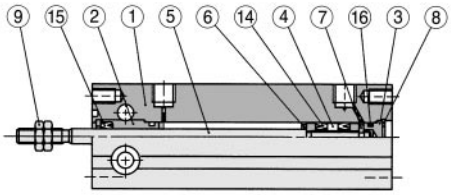

With auto switch

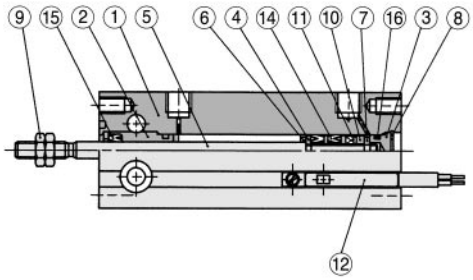

ø10

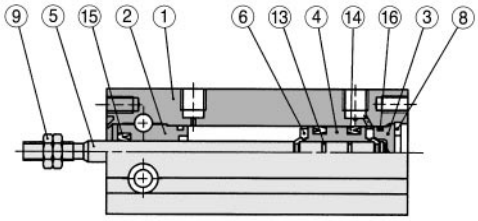

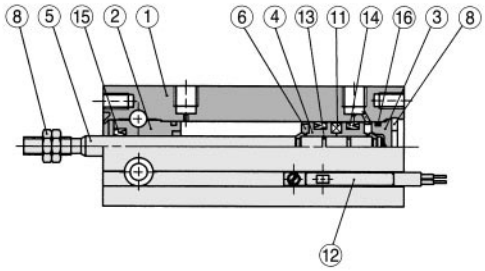

ø16 to ø32

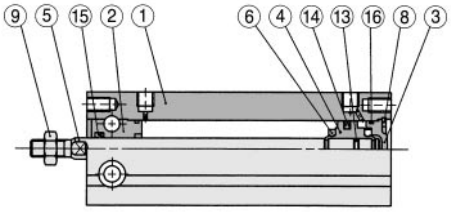

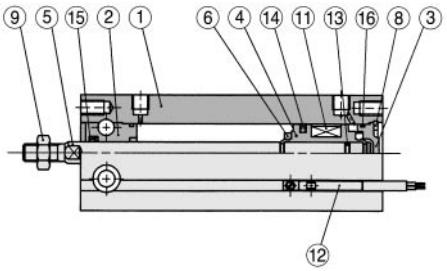

Component Parts

No.	Description	Material	Note
①	Cylinder tube	Aluminum alloy	Hard anodized
②	Rod cover	Aluminum bearing alloy	Hard anodized
③	Head cover	Brass	ø6 to ø10, nickel plated
		Aluminum alloy	ø16 to ø32, White chromated
④	Piston	Brass	ø6 to ø10
		Aluminum alloy	ø16 to ø32, Chromated
⑤	Piston rod	Stainless steel	
⑥	Bumper A	Urethane	
⑦	Bumper B	Urethane	

No.	Description	Material	Note
⑧	Snap ring	Carbon tool steel	Phosphate coating
⑨	Rod end nut	Carbon steel	Nickel plated
⑩	Magnet holder	Brass	ø6
⑪	Magnet	Magnet material	
⑫	Auto switch	——	
⑬	Piston gasket	NBR	
⑭	Piston seal		
⑮	Rod seal		
⑯	Gasket		

Replacement Parts: Seal Kits

Bore size (mm)	Kit No.	Contents
ø10	CU10D-PS	Kits include items ⑭, ⑮ and ⑯ from the table above
ø16	CU16D-PS	
ø20	CU20D-PS	
ø25	CU25D-PS	
ø32	CU32D-PS	

Seal kits consist of items ⑭, ⑮ and ⑯ contained in one kit, and can be ordered using the order number for each respective tube bore size.

Dimensions/Double Acting Single Rod

ø6, ø10

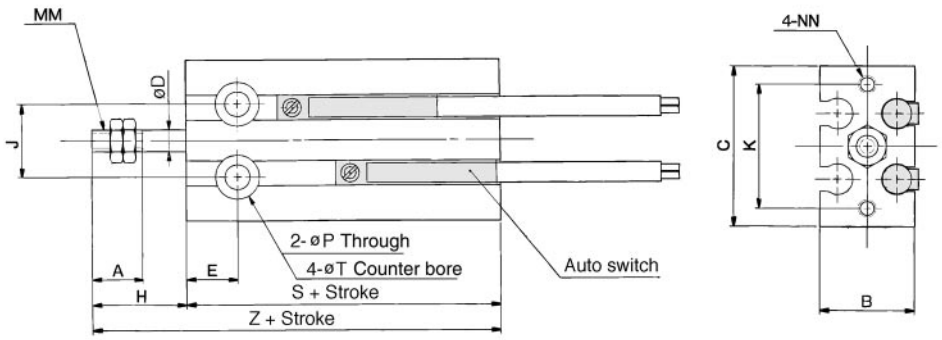

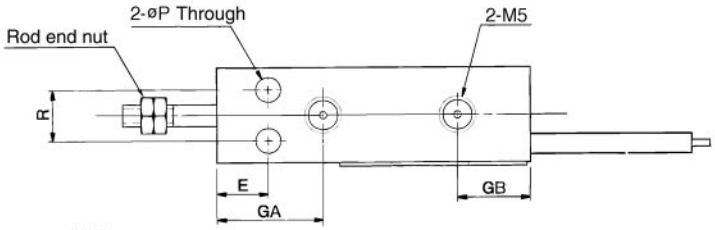

ø16 to ø32

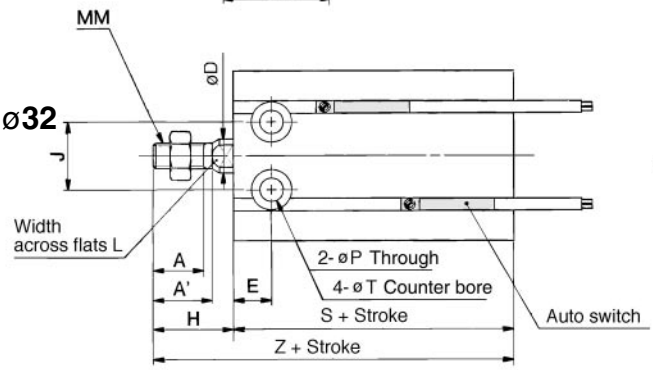

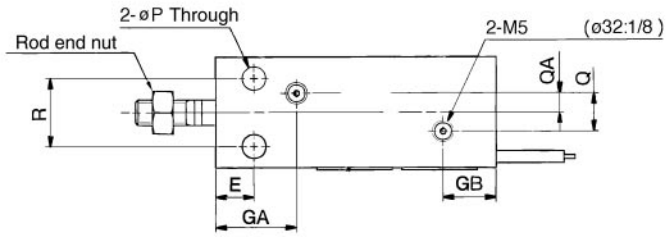

Rod end nut/Options

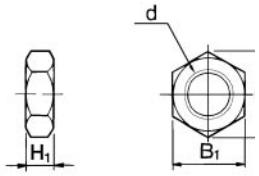

Material: Carbon steel

Part No.	Tube bore size (mm)	d	H_1	B_1	C_1
NTP-006	**6**	M3	1.8	5.5	6.4
NTP-010	**10**	M4	2.4	7	8.1
NTJ-015A	**16**	M5	4	8	9.2
NT-015A	**20**	M6	5	10	11.5
NT-02	**25**	M8	5	13	15.0
NT-03	**32**	M10 X 1.25	6	17	19.6

(mm)

Bore (mm)	A	A'	B	C	D	E	GA	GB	H	J	K	L	MM	NN	P	Q	QA
6	7	–	13	22	3	7	15	10	13	10	17	–	M3	M3 Depth 5	3.2	–	–
10	10	–	15	24	4	7	16.5	10	16	11	18	–	M4	M3 Depth 5	3.2	–	–
16	11	12.5	20	32	6	7	16.5	11.5	16	14	25	5	M5	M4 Depth 6	4.5	4	2
20	12	14	26	40	8	9	19	12.5	19	16	30	6	M6	M5 Depth 8	5.5	9	4.5
25	15.5	18	32	50	10	10	21.5	13	23	20	38	8	M8	M5 Depth 8	5.5	9	4.5
32	19.5	22	40	62	12	11	23	12.5	27	24	48	10	M10 X 1.25	M6 Depth 9	6.6	13.5	4.5

Bore (mm)	R	T	W/o auto switch		W/ auto switch	
			S	Z	S	Z
6	7	6 Depth 4.8	33	46	33	46
10	9	6 Depth 5	36	52	36	52
16	12	7.6 Depth 6.5	30	46	40	56
20	16	9.3 Depth 8	36	55	46	65
25	20	9.3 Depth 9	40	63	50	73
32	24	11 Depth 11.5	42	69	52	79

Free Mount Cylinder/Long Stroke
Non-rotating Rod: Double Acting Single Rod

Series CUK

ø6, ø10, ø16, ø20, ø25, ø32

How to Order

Standard □ CUK 6 — 60 D

With auto switch □ CDUK 6 — 60 D — A90 □

Thread Port (ø32)

—	Rc(PT)
E	G(PF)

Built-in magnet

Non-rotating rod

Bore size

6	6mm
10	10mm
16	16mm
20	20mm
25	25mm
32	32mm

Stroke (mm)

ø6, ø10, ø16	40, 50, 60
ø20, ø25, ø32	60, 70, 80, 90, 100

Action

D	Double acting

Auto switch

—	Without auto switch

Refer to the table below for auto switch model no.

Number of auto switches

—	2
S	1

These auto switches have been changed
Contact SMC or view www.smcworld.com

F9N➡**M9N**	F9NV➡**M9NV**
F9P➡**M9P**	F9PV➡**M9PV**
F9B➡**M9B**	F9BV➡**M9BV**

Applicable Auto Switches/Refer to p.5.3-2 for further information on auto switches.

Style	Special function	Electrical entry	Indicator	Wiring (Output)	Load voltage			Model		Lead wire※(m)			Applicable load	
					DC		AC	Perp.	In-line	0.5 (–)	3 (L)	5 (Z)		
Reed switch	—	Grommet	No	2 wire	24V	5V 12V	≤ 100V	**A90V**	**A90**	●	●	—	IC	Relay, PLC
			Yes			12V	100V	**A93V**	**A93**	●	●	—	—	
				3 wire (Equiv. NPN)	—	5V	—	**A96V**	**A96**	●	●	—	IC	
Solid state switch	—	Grommet	Yes	3 wire (NPN)	24V	12V	—	**F9NV**	**F9N**	●	●	—	—	Relay, PLC
				3 wire (PNP)				**F9PV**	**F9P**	●	●	—		
				2 wire				**F9BV**	**F9B**	●	●	—		
	Diagnostic (2 colour)			3 wire (NPN)				**F9NWV**	**F9NW**	●	●	○		
				3 wire (PNP)				**F9PWV**	**F9PW**	●	●	○		
				2 wire				**F9BWV**	**F9BW**	●	●	○		
	Water resistant (2 colour)							—	**F9BA**	—	●	○		

※Lead wire length 0.5m····· – (Example) A93 5m····· Z (Example) F9NWZ
3m····· L (Example) A93L

※Solid state switches marked with a "○" are manufactured upon receipt of order.

D-9□ auto switch is attachable. Refer to p.5.3-21 and 5.3-22 for detailed specifications of D-90, D-90A, D-93A, D-97.

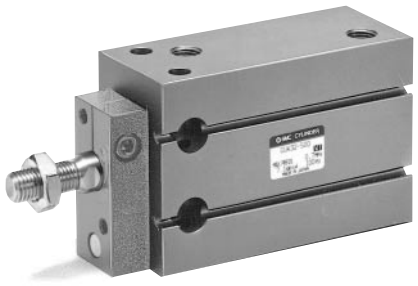

JIS symbol
Double acting/Single rod

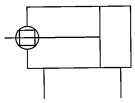

Specifications

Bore size (mm)	ø6	ø10	ø16	ø20	ø25	ø32
Fluid	Air					
Proof pressure	1.05MPa					
Max. operating pressure	0.7MPa					
Min. operating pressure	0.15MPa		0.10MPa		0.08MPa	
Ambient and fluid temperature	Without auto switch: –10°C to –70°C With auto switch : –10°C to –60°C (No freezing)					
Lubrication	Not required (Non-lube)					
Operating piston speed	50 to 500mm/s					
Cushion	Rubber bumper					
Rod end thread	Male thread					
Thread tolerance	JIS class 2					
Stroke tolerance	$^{+1.0}_{0}$ mm					
Non-rotating accuracy (1)	±0.8°			±0.5°		

Note 1) No load: at rod retracted

Standard Stroke

(mm)

Bore size (mm)	Standard stroke (mm)
ø6, ø10, ø16	40, 50, 60
ø20, ø25, ø32	60, 70, 80, 90, 100

Weight/( ): With D-A90

Unit: g

Model	Stroke (mm)						
	40	50	60	70	80	90	100
C(D)UK6-□D	49 (59)	55 (65)	61 (71)	–	–	–	–
C(D)UK10-□D	71 (81)	79 (89)	87 (97)	–	–	–	–
C(D)UK16-□D	102 (132)	114 (144)	126 (156)	–	–	–	–
C(D)UK20-□D	–	–	243 (284)	267 (308)	291 (332)	315 (356)	339 (380)
C(D)UK25-□D	–	–	405 (460)	440 (495)	475 (530)	510 (565)	545 (600)
C(D)UK32-□D	–	–	617 (695)	669 (747)	721 (799)	773 (851)	825 (903)

Refer to p.5.3-75 for auto switch weight.

CUJ
CU
CQS
CQ2
RQ
MU

⚠ Precautions

Be sure to read before handling.
Refer to p.0-39 to 0-46 for Safety Instructions and common precautions.

Allowable Rotating Toque

Make sure that rotational torque is not applied to the piston rod of long stroke style cylinder. If rotational torque must be applied due to unavoidable circumstances, refer to p.2.1-32.

Tightening Torque

Refer to p.2.1-11 for mounting of CUK series.

Theoretical Force

Refer to p.2.1-12. Specifications are same as CU double acting single rod style.

Auto Switch Mounting Position

Refer to p.2.1-16 for auto switch mounting position of CDUK long stroke.
Specifications are same as standard single acting double rod style.

Construction

ø6

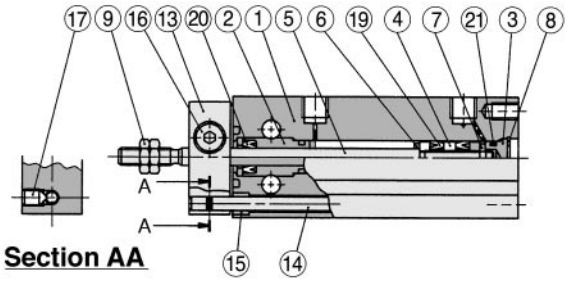

With auto switch

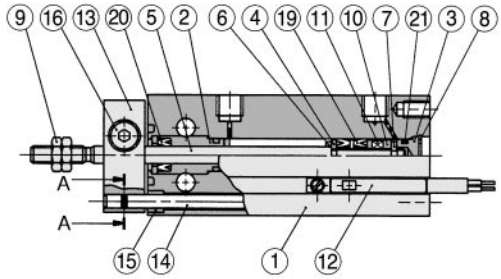

ø10

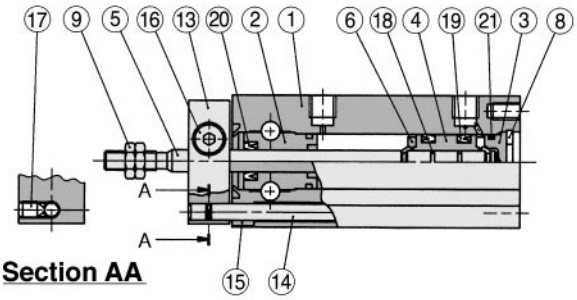

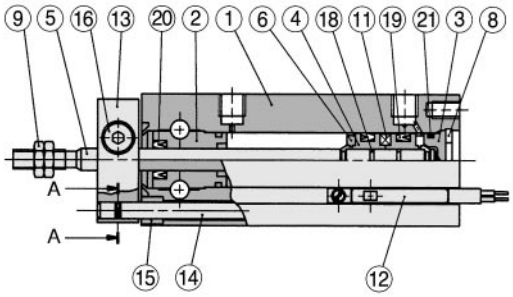

ø16 to ø32

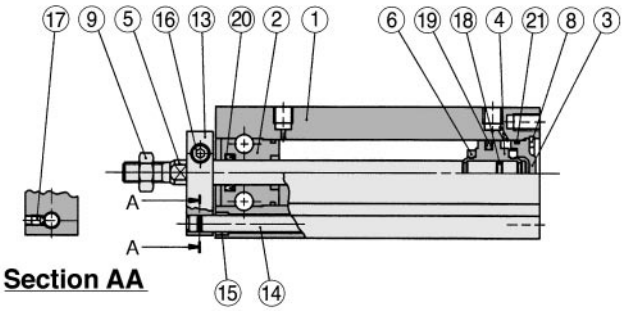

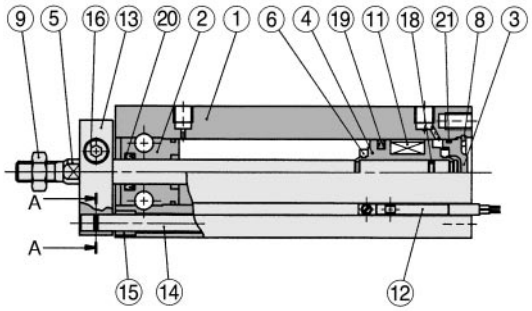

Component Parts

No.	Description	Material	Note
①	Cylinder tube	Aluminum alloy	Hard anodized
②	Rod cover	Aluminum bearing alloy	Hard anodized
③	Head cover	Brass	ø6 to ø10, nickel plated
		Aluminum alloy	ø16 to ø32, White chromated
④	Piston	Brass	ø6 to ø10
		Aluminum alloy	ø16 to ø32, Chromated
⑤	Piston rod	Stainless steel	
⑥	Bumper A	Urethane	
⑦	Bumper B	Urethane	
⑧	Snap ring	Carbon tool steel	Phosphate coating
⑨	Rod end nut	Carbon steel	Nickel plated
⑩	Magnet holder	Brass	ø6

No.	Description	Material	Note
⑪	Magnet	Magnet material	
⑫	Auto switch	——	
⑬	Non-rotating plate	Aluminum alloy	Nickel plated
⑭	Guide rod	Stainless steel	
⑮	Bushing	Black anodized	
⑯	Hex. socket head cap screw	Carbon steel	Black zinc chromated
⑰	Hex. socket head snap ring	Carbon steel	Black zinc chromated
⑱	Piston gasket	NBR	
⑲	Piston seal		
⑳	Rod seal		
㉑	Gasket		

Replacement Parts: Seal Kits

Bore size (mm)	Kit No.	Contents
ø10	CU10D-PS	Kits include items ⑲, ⑳ and ㉑ from the table above.
ø16	CU16D-PS	
ø20	CU20D-PS	
ø25	CU25D-PS	
ø32	CU32D-PS	

Seal kits consist of items ⑲, ⑳ and ㉑ contained in one kit, and can be ordered using the order number for each respective tube bore size.

Dimensions/Non-rotating Rod: Double Acting Single Rod

ø6, ø10

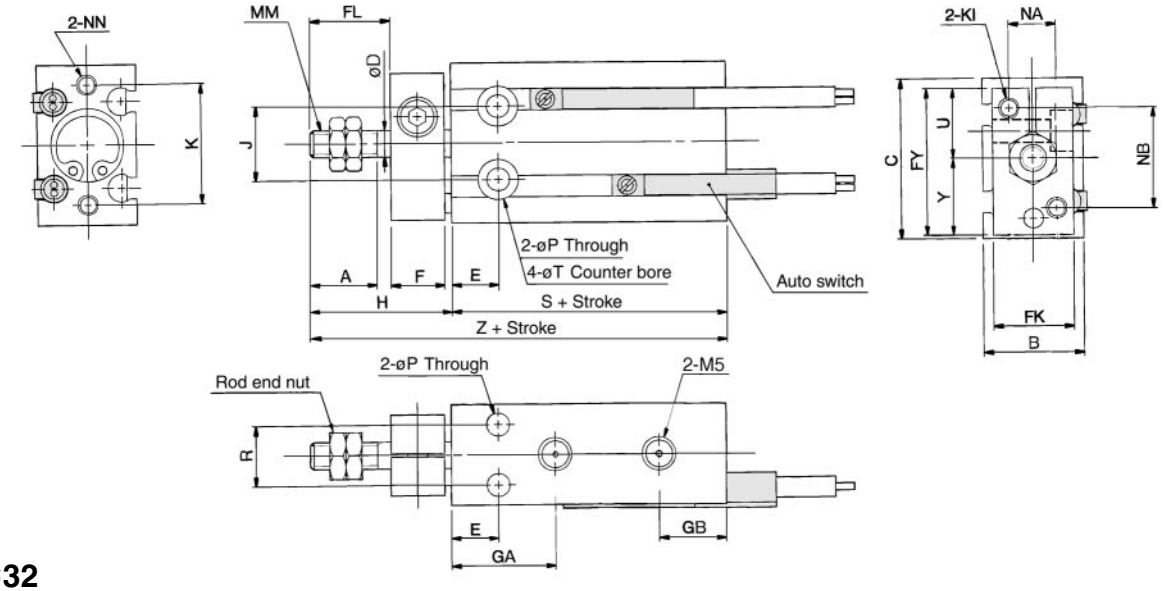

ø16 to ø32

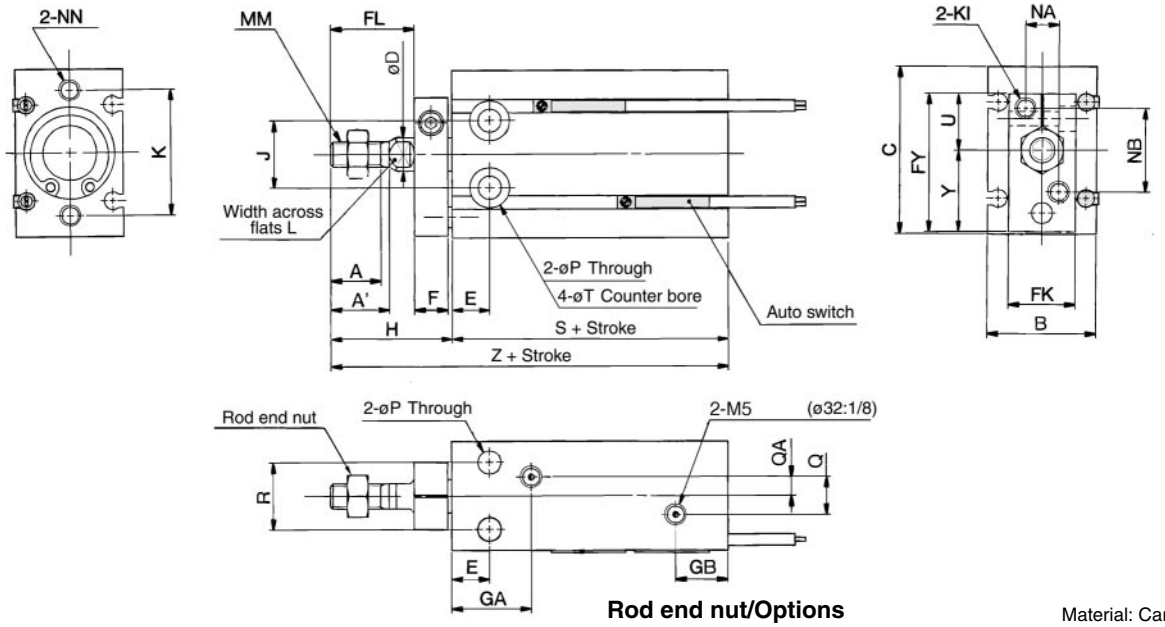

Rod end nut/Options

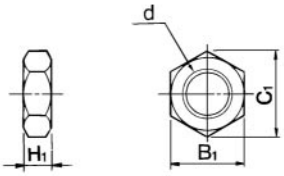

Material: Carbon steel

Part No.	Tube bore size (mm)	d	H1	B1	C1
NTP-006	**6**	M3	1.8	5.5	6.4
NTP-010	**10**	M4	2.4	7	8.1
NTJ-015A	**16**	M5	4	8	9.2
NT-015A	**20**	M6	5	10	11.5
NT-02	**25**	M8	5	13	15.0
NT-03	**32**	M10 X 1.25	6	17	19.6

(mm)

Bore (mm)	A	A'	B	C	D	E	F	FL	FK	FY	GA	GB	H	J	K	KI	L	MM
6	7	–	13	22	3	7	8	9	11	20.5	15	10	18	10	17	M3	–	M3
10	10	–	15	24	4	7	8	12	12	22	16.5	10	21	11	18	M3	–	M4
16	11	12.5	20	32	6	7	8	17	13	28	16.5	11.5	26	14	25	M4	5	M5
20	12	14	26	40	8	9	8	20	16	33	19	12.5	29	16	30	M4	6	M6
25	15.5	18	32	50	10	10	10	22	20	43.5	21.5	13	33	20	38	M5	8	M8
32	19.5	22	40	62	12	11	12	29	24	51.5	23	12.5	42	24	48	M5	10	M10 X 1.25

Bore (mm)	NA	NB	NN	P	Q	QA	R	T	U	Y	W/o auto switch		W/ auto switch	
											S	Z	S	Z
6	6	14	M3 Depth5	3.2	–	–	7	6 Depth4.8	10	10.5	33	51	33	51
10	7	15	M3 Depth5	3.2	–	–	9	6 Depth5	10.5	11.5	36	57	36	57
16	6	18	M4 Depth6	4.5	4	2	12	7.6 Depth6.5	12.5	15.5	30	56	40	66
20	8	20	M5 Depth8	5.5	9	4.5	16	9.3 Depth8	13.5	19.5	36	65	46	75
25	10	28	M5 Depth8	5.5	9	4.5	20	9.3 Depth9	19	24.5	40	73	50	83
32	12	32	M6 Depth9	6.6	13.5	4.5	24	11 Depth11.5	21	30.5	42	84	52	94