Technical Data
Data Sheet N1674, Rev. A

303DMQ600 ULTRAFAST RECTIFIER



PRM4 (Isolated)

Features

- 175 ℃ T_J operation
- Center tap module
- High purity, high temperature epoxy encapsulation for
- enhanced mechanical strength and moisture resistance
- Low forward voltage drop
- High frequency operation
- Guard ring for enhanced ruggedness and long term reliability
- Base plate: Nickel plated; Terminals: Nickel plated
- The terminal hardware is supplied with the module.
- The mounting hardware is not supplied. Recommended is the use of ¼-20 or M6 screws with spring washer.
- This is a Pb − Free Device
- All SMC parts are traceable to the wafer lot
- Additional testing can be offered upon request

Circuit Diagram

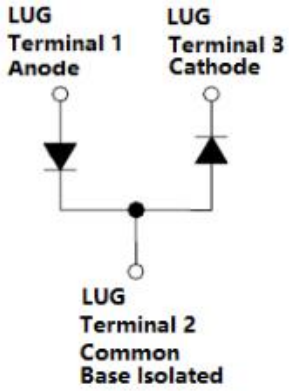

Applications

- High current switching power supply
- Plating power supply
- Free-Wheeling diodes
- Reverse battery protection
- Converters
- UPS System
- Welding

Maximum Ratings(limiting values, at 25 °C unless otherwise specified)

Characteristics	Symbol	Condition	Max.	Units
Peak Repetitive Reverse Voltage Working Peak Reverse Voltage DC Blocking Voltage	V_{RRM} V_{RWM} V_R	-	600	V
Average Rectified Forward Current	$I_{F\ (AV)}$	50% duty cycle @T_C =117°C, rectangular wave form	150(Per leg) 300(Per device)	A
Peak One Cycle Non-Repetitive Surge Current	I_{FSM}	8.3 ms, half Sine pulse	3000	A
Non-Repetitive Avalanche Energy(per leg)	E_{AS}	TJ=25°C,IAS=1A,L=30mH	15	mJ
Repetitive avalanche current (per leg)	I_{AR}	Current decaying linearly to zero in 1μsec frequency limited by T_J max.V_A=1.5X V_R typical	1	A

Technical Data
Data Sheet N1674, Rev. A

Electrical Characteristics:

Characteristics	Symbol	Condition	Typ.	Max.	Units
Forward Voltage Drop*	V_{F1}	@ 150A, Pulse, T_J = 25 °C @ 300 A, Pulse, T_J = 25 °C	1.07 1.20	1.40 1.68	V
	V_{F2}	@ 150A, Pulse, T_J = 125 °C @ 300 A, Pulse, T_J = 125 °C	0.96 1.08	1.20 1.38	V
Reverse Current *	I_{R1}	@V_R = rated V_R T_J = 25 °C	0.0003	0.1	mA
	I_{R2}	@V_R = rated V_R T_J = 125 °C	0.04	20	mA
Junction Capacitance	C_T	@V_R = 5V, T_C = 25 °C f_{SIG} = 1MHz	730	4150	pF

* Pulse width < 300 µs, duty cycle < 2%

Thermal-Mechanical Specifications:

Characteristics	Symbol	Condition	Specification		Units
Junction Temperature	T_J	-	-55 to +175		°C
Storage Temperature	T_{stg}	-	-55 to +175		°C
Typical Thermal Resistance Junction to Case (per leg)	$R_{\theta JC}$	DC operation	0.30		°C/W
Typical Thermal Resistance Junction to Case (per package)	$R_{\theta JC}$	DC operation	0.15		°C/W
Typical Thermal Resistance, Case to Heat Sink	$R_{\theta CS}$	Mounting surface, smooth and greased	0.05		°C/W
Approximate Weight	wt	-	110		g
Mounting Torque	T_M	-	Mounting Torque	3.84(min) 4.80(max)	Nm
		-	Terminal Torque	2.35(min) 3.43(max)	
Case Style	PRM4 Isolated				

Technical Data
Data Sheet N1674, Rev. A

RoHS

Ratings and Characteristics Curves

Figure1
Typical Forward Characteristics

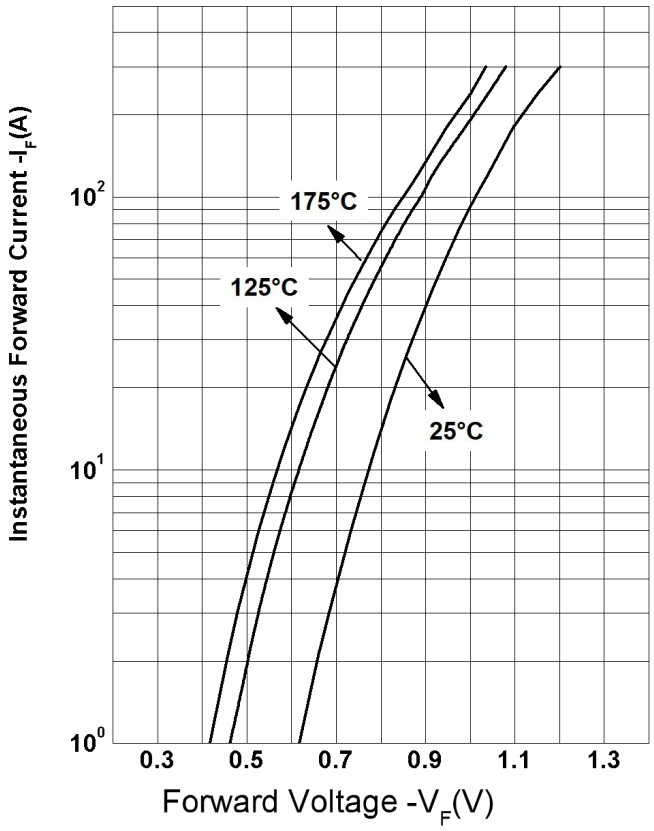

Figure 2
Typical Reverse Characteristics

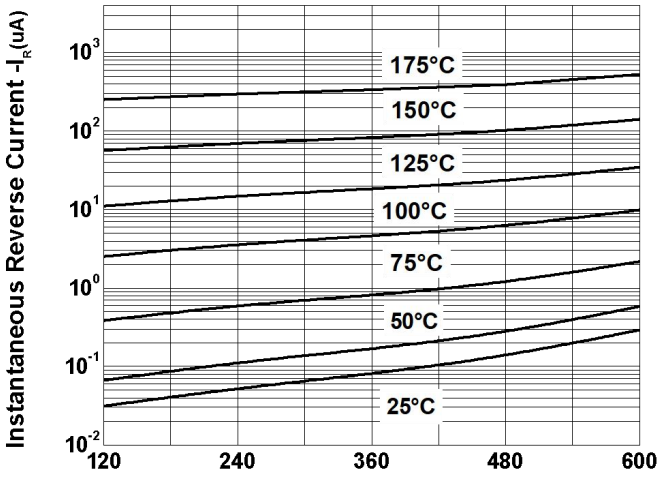

Figure 3
Typical Junction Capacitance

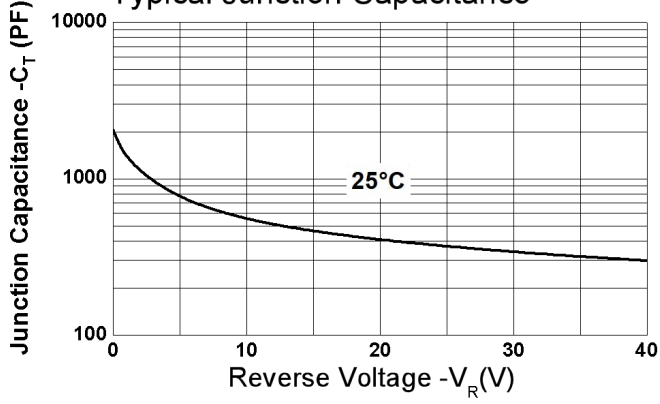

Ordering Information

Device	Package	Shipping
303DMQ600	PRM4 (Isolated) (Pb-Free)	9pcs/ box

Marking Diagram



Where XXXX is YYWW

1st row SS YYWW
2nd row 303DMQ600
SS = SS
YY = Year
WW = Week

Cautions: Molding resin
Epoxy resin UL:94V-0

Technical Data
Data Sheet N1674, Rev. A

RoHS

Mechanical Dimensions PRM4 Isolated(Millimeters/Inches)

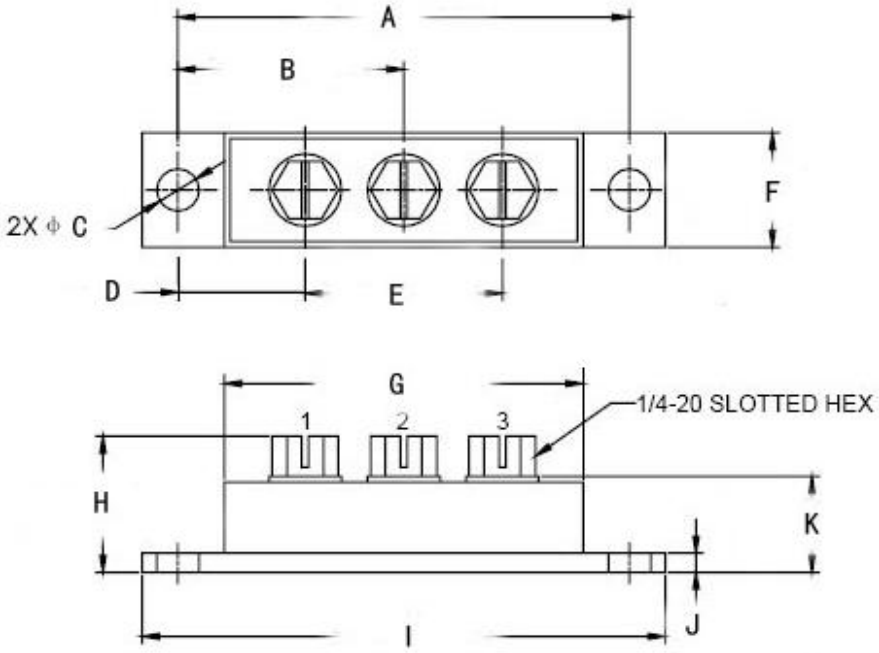

SYMBOL	Millimeters		Inches	
	Min.	Max.	Min.	Max.
A	78.74	81.28	3.100	3.200
B	37.47	42.55	1.475	1.675
C	6.89	7.69	0.271	0.303
D	19.51	24.59	0.768	0.968
E	33.02	38.10	1.300	1.500
F	17.78	20.32	0.700	0.800
G	60.96	64.77	2.400	2.550
H	17.56	23.55	0.691	0.927
I	90.17	92.71	3.550	3.650
J	3.02	3.68	0.119	0.145
K	15.75	17.50	0.620	0.689

1/4-20 screws (Millimeters)

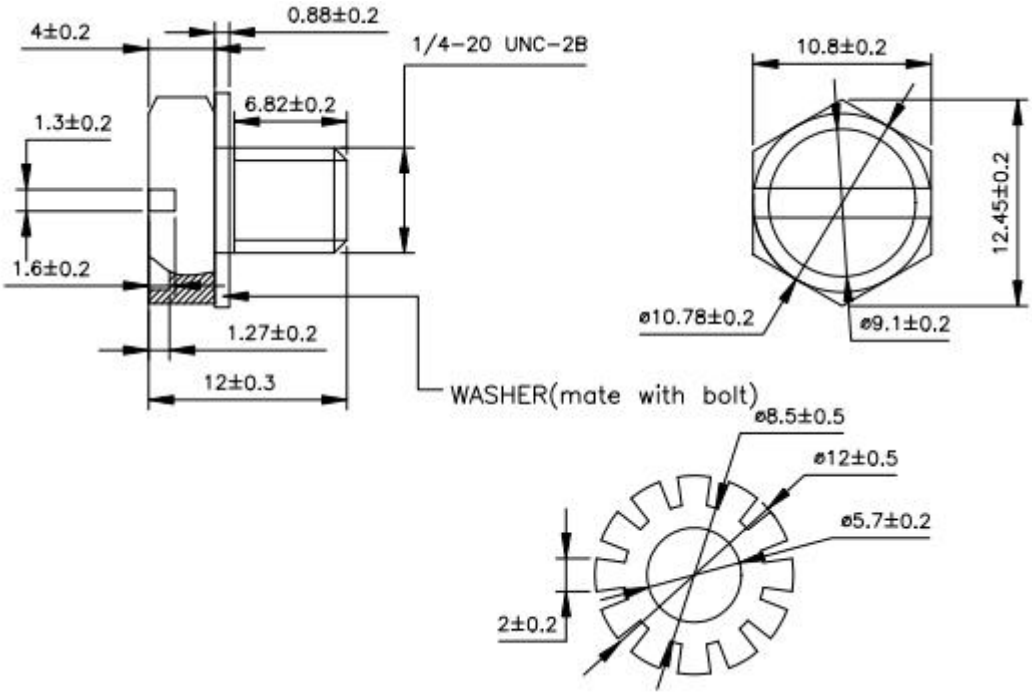

Technical Data
Data Sheet N1674, Rev. A

DISCLAIMER:
1- The information given herein, including the specifications and dimensions, is subject to change without prior notice to improve product characteristics. Before ordering, purchasers are advised to contact the SMC Diode Solutions sales department for the latest version of the datasheet(s).
2- In cases where extremely high reliability is required (such as use in nuclear power control, aerospace and aviation, traffic equipment, medical equipment , and safety equipment) , safety should be ensured by using semiconductor devices that feature assured safety or by means of users' fail-safe precautions or other arrangement .
3- In no event shall SMC Diode Solutions be liable for any damages that may result from an accident or any other cause during operation of the user's units according to the datasheet(s). SMC Diode Solution assumes no responsibility for any intellectual property claims or any other problems that may result from applications of information, products or circuits described in the datasheets.
4- In no event shall SMC Diode Solutions be liable for any failure in a semiconductor device or any secondary damage resulting from use at a value exceeding the absolute maximum rating.
5- No license is granted by the datasheet(s) under any patents or other rights of any third party or SMC Diode Solutions.
6- The datasheet(s) may not be reproduced or duplicated, in any form, in whole or part, without the expressed written permission of SMC Diode Solutions.
7- The products (technologies) described in the datasheet(s) are not to be provided to any party whose purpose in their application will hinder maintenance of international peace and safety nor are they to be applied to that purpose by their direct purchasers or any third party. When exporting these products (technologies), the necessary procedures are to be taken in accordance with related laws and regulations..

Unikeyic Electronics

Global Electronic Components Distributor

Click to view pricing, inventory, delivery, and lifecycle information:

SMC:

MBR30100 STB60100C BZT52B5V1S S8ULCC36-2 SDUR1040 SDURD1030 SF14G 83CNQ080 MBR1550S MBR4080CT S2M0120120K SDURB860A SMBJ33CATR MBR40200WT 183NQ100R-1 5.0SMCJ33A STD20100CE 5.0SMCJ60CA MBRF10100CT 3.0SMCJ22CA SST24A-800BW MBRB10200CT MMSZ5261B SCT825B UG2KB100 MBRF2060CT MBR60150CT 151CMQ045 CESD24VD5 MB6F