THIS DRAWING IS UNPUBLISHED. RELEASED FOR PUBLICATION –,– .
© COPYRIGHT – By – ALL RIGHTS RESERVED.

| LOC | DIST |
|---|---|
| DF | DO |

REVISIONS

| P | LTR | DESCRIPTION | DATE | DWN | APVD |
|---|---|---|---|---|---|
| | T1 | REVISED PER ECO-11-005139 | 21MAR11 | RK | HMR |

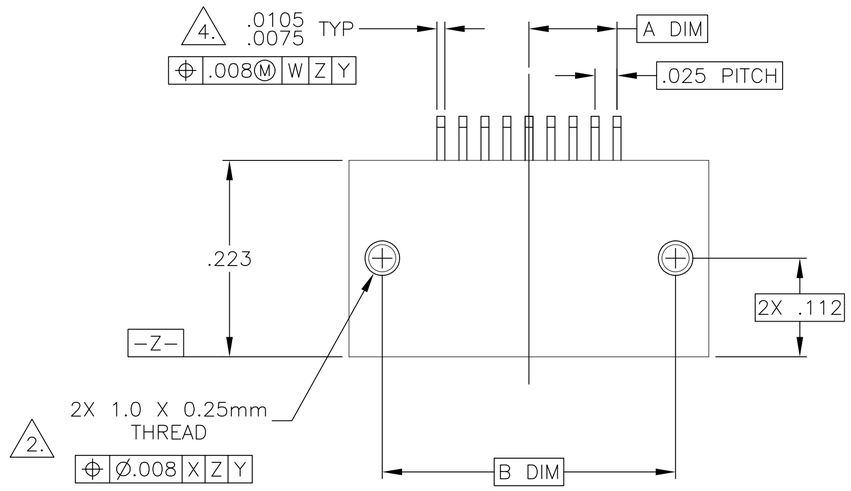


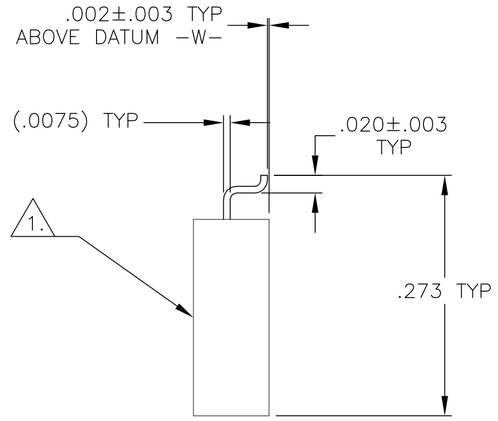


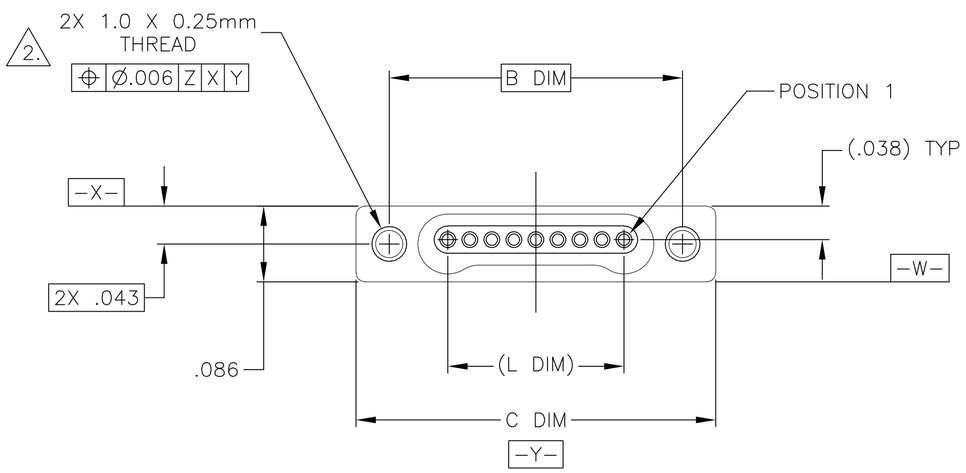


| SIZE | A DIM | B DIM | C DIM ±.0050 | (L DIM) |
|---|---|---|---|---|
| 05 | .050 | .233 | .3085 | (.100) |
| 09 | .100 | .333 | .4085 | (.200) |
| 15 | .175 | .483 | .5585 | (.350) |
| 25 | .300 | .733 | .8085 | (.600) |
| 37 | .450 | 1.033 | 1.1085 | (.900) |
| 51 | .625 | 1.383 | 1.4585 | (1.250) |

1. SHELL OPTIONS (TO BE SPECIFIED IN NANONICS PART NUMBER):
   METAL: 6061-T6 ALUMINUM, ELECTROLESS NICKEL PLATED PER MIL-C-26074 (STANDARD) OR GOLD PLATED PER MIL-G-45204
   303 STAINLESS STEEL, PASSIVATED PER SAE-AMS-QQ-P-35
   INSULATOR MATERIAL FOR ALL METAL SHELLS IS LIQUID CRYSTAL POLYMER (LCP) PER MIL-M-24519 OR PER ASTM D5138
   PLASTIC: LIQUID CRYSTAL POLYMER (LCP) PER MIL-M-24519 OR PER ASTM D5138
2. STANDARD 1.0 X 0.25mm JACKSCREW AND MOUNTING THREADS ARE SHOWN FOR REFERENCE ONLY AND MUST BE SPECIFIED IN THE NANONICS PART NUMBER WHEN REQUIRED. 1.2 X 0.25mm THREADS ALSO AVAILABLE.
3. MOUNTING HARDWARE IS AVAILABLE WITH THIS CONFIGURATION (NOT SHOWN). HARDWARE MUST BE SPECIFIED IN THE NANONICS PART NUMBER. CONSULT TE CONNECTIVITY FOR DETAILS.
4. SMT LEADS ARE BeCu, TIN LEAD PLATED 60/40 COMPOSITION PER SAE-AMS-P-81728
5. NANONICS TERMINATION CODE: L2
6. THIS DRAWING PREVIOUSLY IDENTIFIED AS NANONICS N10138/130

THIS DRAWING IS A CONTROLLED DOCUMENT.

DIMENSIONS: INCHES

TOLERANCES UNLESS OTHERWISE SPECIFIED:
0 PLC ± –
1 PLC ± –
2 PLC ± .010
3 PLC ± .005
4 PLC ± –
ANGLES ± 1°

MATERIAL: SEE NOTES
FINISH: SEE NOTES

DWN M. STORRY 02-15-01
CHK S. KAIN 02-15-01
APVD – –
PRODUCT SPEC —
APPLICATION SPEC —
WEIGHT —

TE Connectivity

NAME
RECEPTACLE ASSEMBLY,
HORIZONTAL SURFACE MOUNT,
SINGLE ROW DUALOBE, PLASTIC OR METAL

| SIZE | CAGE CODE | DRAWING NO | RESTRICTED TO |
|---|---|---|---|
| A2 | 00779 | C-1589462 | — |

CUSTOMER DRAWING | SCALE 8:1 | SHEET 1 OF 2 | REV T1

1589462

1471-9 (3/11)

THIS DRAWING IS UNPUBLISHED. RELEASED FOR PUBLICATION – , – .
© COPYRIGHT – By – ALL RIGHTS RESERVED.

| LOC | DIST |
|---|---|
| DF | DO |

REVISIONS

| P | LTR | DESCRIPTION | DATE | DWN | APVD |
|---|---|---|---|---|---|
| | – | SEE SHEET 1 | – | — | — |

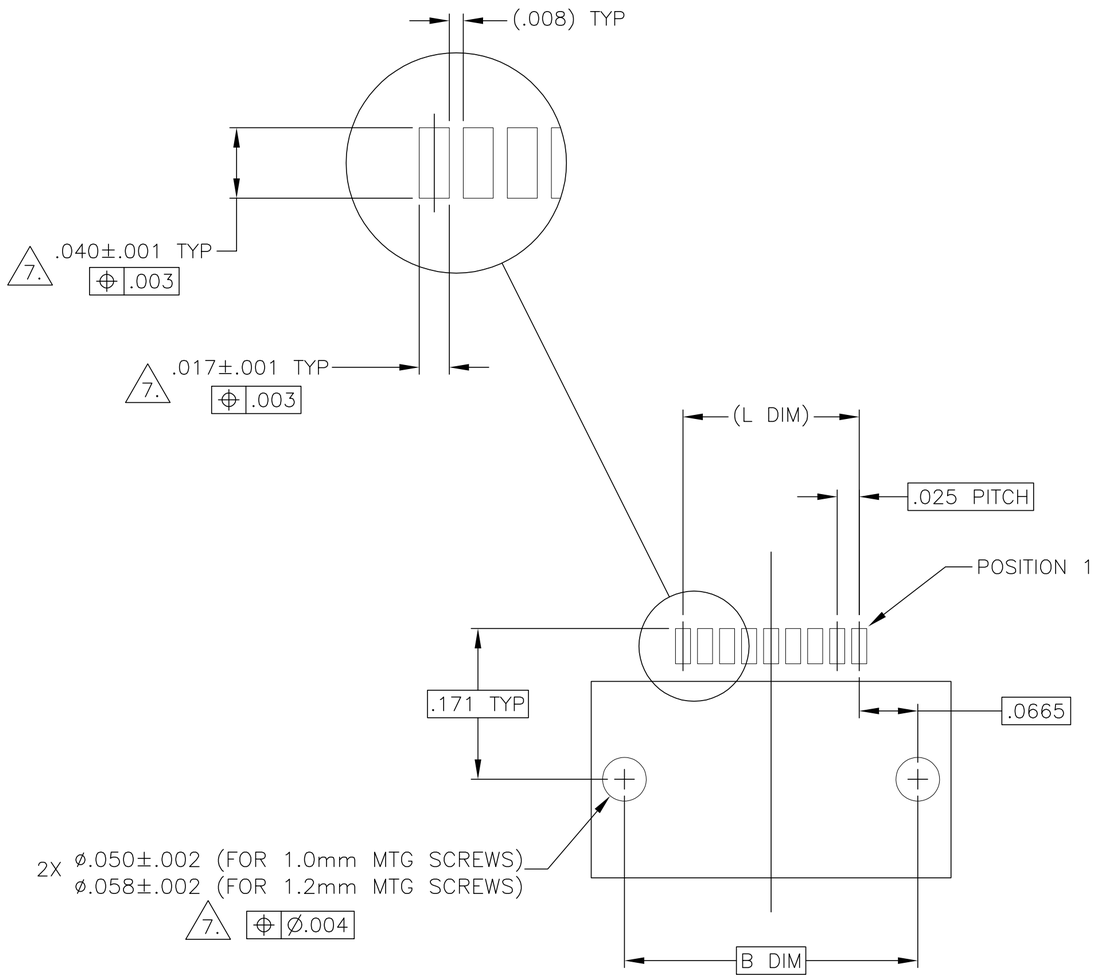


SIZE 09 SHOWN FOR REFERENCE

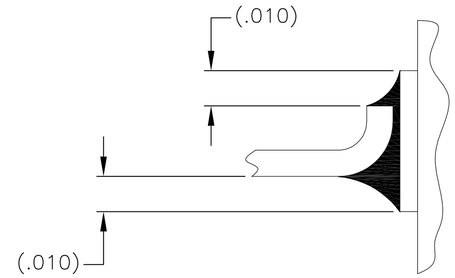


TYPICAL FOOT PLACEMENT
ON SOLDER PAD

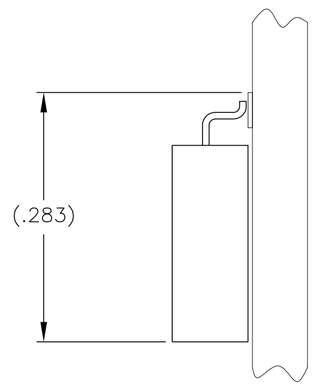


TYPICAL PCB LAYOUT

7. POSITIONAL TOLERANCES FOR BASIC DIMENSIONED FEATURES ARE RELATIVE TO FIDUCIALS OR SOME SIMILAR DATUM REFERENCE DEFINED BY THE PCB DESIGNER.

THIS DRAWING IS A CONTROLLED DOCUMENT.

DIMENSIONS: INCHES

TOLERANCES UNLESS OTHERWISE SPECIFIED:
0 PLC ± –
1 PLC ± –
2 PLC ± .010
3 PLC ± .005
4 PLC ± –
ANGLES ± 1°

MATERIAL –
FINISH –

DWN M. STORRY 02-15-01
CHK S. KAIN 02-15-01
APVD – —
PRODUCT SPEC —
APPLICATION SPEC —
WEIGHT —

TE Connectivity

NAME
RECEPTACLE ASSEMBLY,
HORIZONTAL SURFACE MOUNT,
SINGLE ROW DUALOBE, PLASTIC OR METAL

| SIZE | CAGE CODE | DRAWING NO | RESTRICTED TO |
|---|---|---|---|
| A2 | 00779 | C-1589462 | — |

CUSTOMER DRAWING | SCALE 8:1 | SHEET 2 OF 2 | REV T1

1589462

# Unikeyic Electronics

Global Electronic Components Distributor

Click to view pricing, inventory, delivery, and lifecycle information:

## TE Connectivity:

1-1743284-2 1743455-2 917696-1 936348-1 1393431-1 2-32562-2 2377783-2 3-1393225-0
3430B2F51RTDF 352116RFT SMV3W5M6JT 292230-8 917790-2 CRGCQ2010J3K3 CRGCQ0805F150R
2-520103-2 2-520128-2 281990-2 650075-000 141991-2 1969656-1 2-292161-3 640174-1 1-794222-0
1488167-1 35402K7FT 36161 1MM-HU-D10-VS-00-F-TBP 2834055-1 SMW73R0JT