REVISION C

DO NOT SCALE FROM THIS PRINT

DESIGNED & DIMENSIONED IN INCHES [MILLIMETERS]

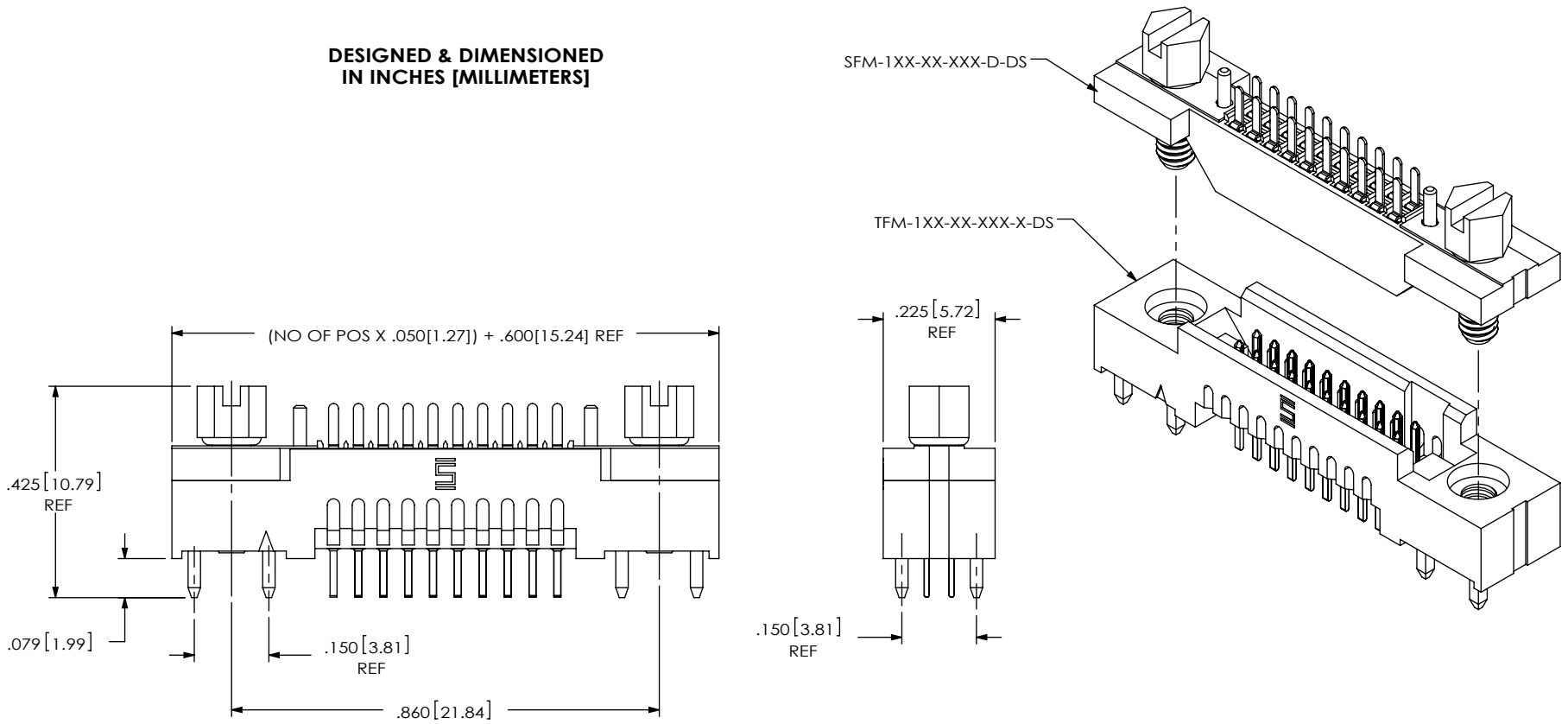

FIG 1
TFM-1XX-XX-XXX-X-DS & SFM-1XX-XX-XXX-D-DS MATING

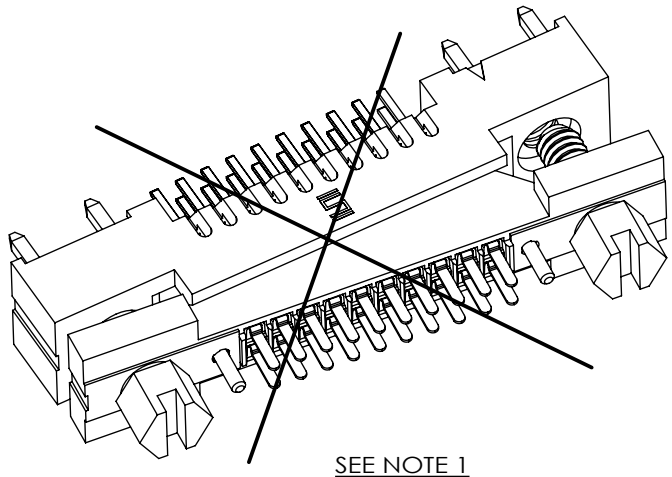

SEE NOTE 1

NOTES:

1. SCREWS MUST BE TIGHTENED IN .060" INCREMENTS, ALTERNATING SIDE TO SIDE; TIGHTEN FASTNERS TO 8 IN OZ MAX.
2. STANDARD .100" SCREW DRIVER RECOMMENDED.

PROPRIETARY NOTE

THIS DOCUMENT CONTAINS INFORMATION CONFIDENTIAL AND PROPRIETARY TO SAMTEC, INC. AND SHALL NOT BE REPRODUCED OR TRANSFERRED TO OTHER DOCUMENTS OR DISCLOSED TO OTHERS OR USED FOR ANY PURPOSE OTHER THAN THAT WHICH IT WAS OBTAINED WITHOUT THE EXPRESSED WRITTEN CONSENT OF SAMTEC, INC.

DO NOT SCALE DRAWING

SHEET SCALE: 4:1

samtec
520 PARK EAST BLVD, NEW ALBANY, IN 47150
PHONE: 812-944-6733 FAX: 812-948-5047
e-Mail info@SAMTEC.com code 55322

DESCRIPTION: SCREW DOWN APPLICATION

DWG. NO. TFM SFM SFSD ISDF SCREW DOWN OPTION APPLICATION

BY: ROY LUO 07/09/2011 SHEET 1 OF 3

F:\DWG\MISC\MKTG\TFM SFM SFSD ISDF SCREW DOWN OPTION APPLICATION-MKT.SLDDRW

REVISION C

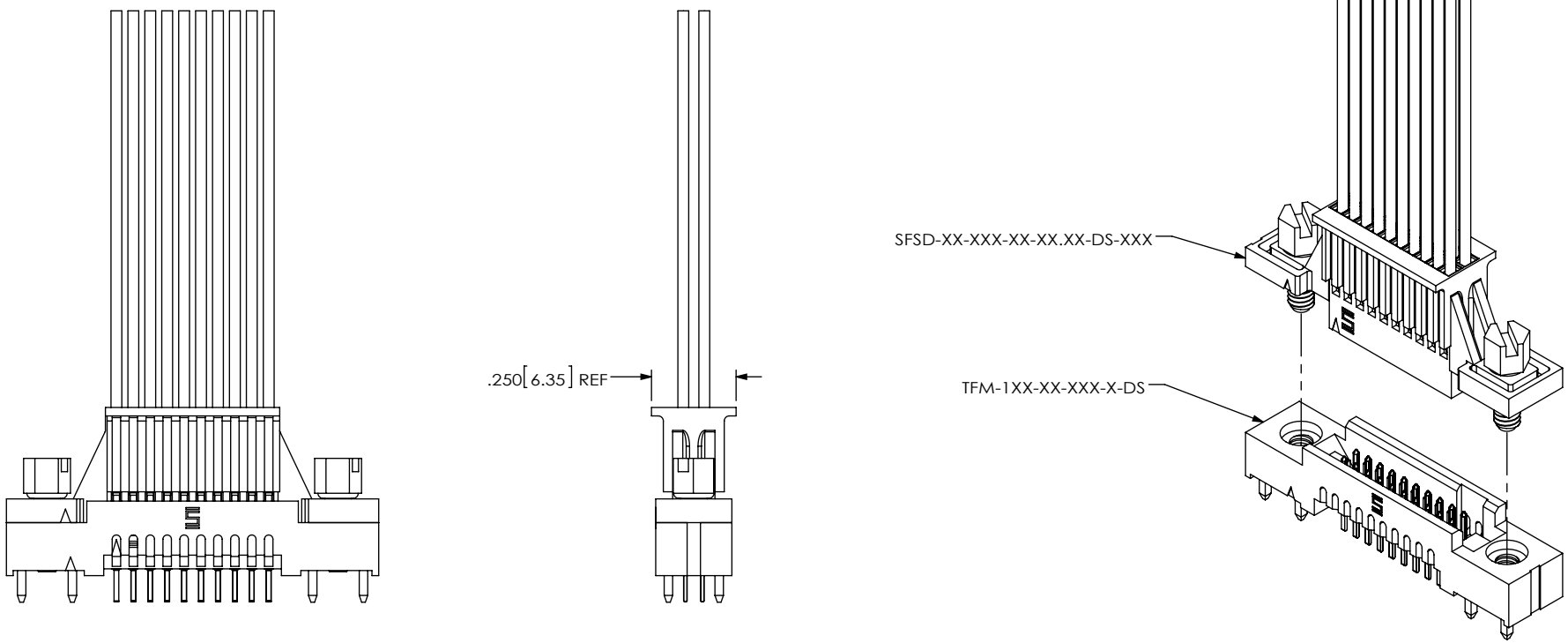

FIG 2
TFM-1XX-XX-XXX-X-DS & SFSD-XX-XXX-XX-XX.XX-DS-XXX MATING
(SAME AS FIG 1, UNLESS OTHERWISE STATED)

PROPRIETARY NOTE
THIS DOCUMENT CONTAINS INFORMATION CONFIDENTIAL AND PROPRIETARY TO SAMTEC, INC. AND SHALL NOT BE REPRODUCED OR TRANSFERRED TO OTHER DOCUMENTS OR DISCLOSED TO OTHERS OR USED FOR ANY PURPOSE OTHER THAN THAT WHICH IT WAS OBTAINED WITHOUT THE EXPRESSED WRITTEN CONSENT OF SAMTEC, INC.

DO NOT SCALE DRAWING

SHEET SCALE: 2:1

520 PARK EAST BLVD, NEW ALBANY, IN 47150
PHONE: 812-944-6733 FAX: 812-948-5047
e-Mail info@SAMTEC.com code 55322

DESCRIPTION:
SCREW DOWN APPLICATION

DWG. NO.
TFM SFM SFSD ISDF SCREW DOWN OPTION APPLICATION

BY: ROY LUO 07/09/2011

F:\DWG\MISC\MKTG\TFM SFM SFSD ISDF SCREW DOWN OPTION APPLICATION-MKT.SLDDRW

REVISION C

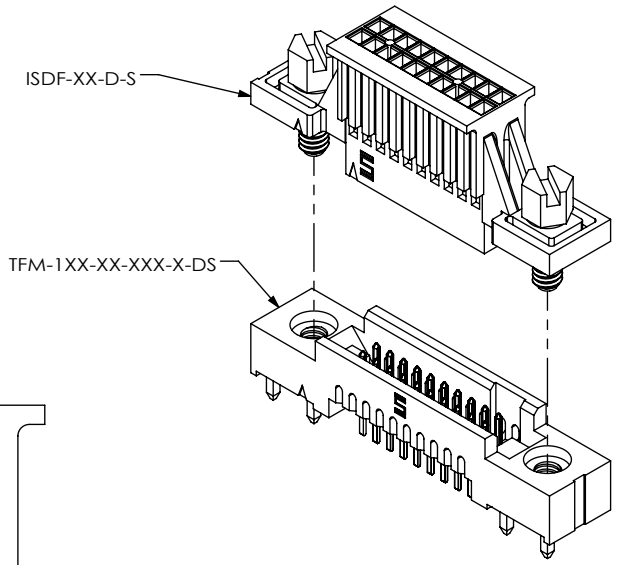

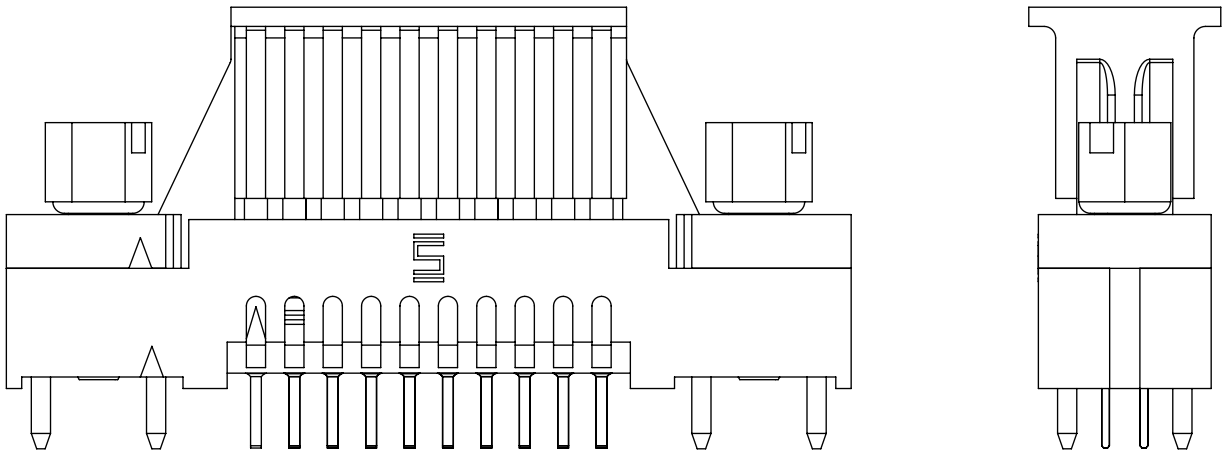

FIG 3
TFM-1XX-XX-XXX-X-DS & ISDF-XX-D-S MATING
(SAME AS FIG 1, UNLESS OTHERWISE STATED)

PROPRIETARY NOTE
THIS DOCUMENT CONTAINS INFORMATION CONFIDENTIAL AND PROPRIETARY TO SAMTEC, INC. AND SHALL NOT BE REPRODUCED OR TRANSFERRED TO OTHER DOCUMENTS OR DISCLOSED TO OTHERS OR USED FOR ANY PURPOSE OTHER THAN THAT WHICH IT WAS OBTAINED WITHOUT THE EXPRESSED WRITTEN CONSENT OF SAMTEC, INC.

DO NOT SCALE DRAWING

SHEET SCALE: 4:1

520 PARK EAST BLVD, NEW ALBANY, IN 47150
PHONE: 812-944-6733 FAX: 812-948-5047
e-Mail info@SAMTEC.com code 55322

DESCRIPTION:
SCREW DOWN APPLICATION

DWG. NO.
TFM SFM SFSD ISDF SCREW DOWN OPTION APPLICATION

BY: ROY LUO 07/09/2011 SHEET 3 OF 3

F:\DWG\MISC\MKTG\TFM SFM SFSD ISDF SCREW DOWN OPTION APPLICATION-MKT.SLDDRW

Unikeyic Electronics

Global Electronic Components Distributor

Click to view pricing, inventory, delivery, and lifecycle information:

samtec:

MMT-110-01-L-DH SEAF-20-06.5-S-06-2-A-K-TR SFM-115-02-S-D-A-P TSW-103-07-T-D TSW-111-07-G-D HTST-108-01-L-DV-P-TR MMS-110-01-L-SV TFM-115-02-L-D-LC IPBT-103-H1-T-S-RA-K MMS-114-02-L-DV PCIE-164-02-F-D-TH SQT-110-01-L-S-RA SQT-120-01-L-D-RA BBL-102-T-E CES-108-02-T-S ESQ-106-33-L-D LSS-140-01-L-DV-A TSDF-03-S-S FTS-102-02-F-DV-TR CLM-104-02-F-D-BE FTSH-110-01-L-D-K ISDF-06-S-R ERF8-035-05.0-L-DV-K-TR FJ-15-D-15.75-4 IPBS-115-01-T-D-GP TSW-150-08-T-S CES-112-01-T-S SLM-118-01-G-S FTE-110-01-G-DV HTSS-110-04-S-D-RA