Technical Data
Data Sheet N2582, REV.-

S6D02065A S6D02065E
650V SIC POWER SCHOTTKY RECTIFIERS

Description

This 650V 2A diode is a high voltage Schottky rectifier that has very low total conduction losses and very stable switching characteristics over temperature extremes. The S6D02065A/S6D02065E are ideal for energy sensitive, high frequency applications in challenging environments.

Applications

- Alternative energy inverters
- Power Factor Correction (PFC)
- Free-Wheeling diodes
- Switching supply output rectification
- Reverse polarity protection

Features

- 175°C T_J operation
- Ultra-low switching loss
- Switching speeds independent of operating temperature
- Low total conduction losses
- High forward surge current capability
- High package isolation voltage
- Terminals finish: 100% Pure Tin
- "-A" is an AEC-Q101 qualified device
- Pb − Free Device
- All SMC parts are traceable to the wafer lot
- Additional electrical and life testing can be performed upon request

S6D02065A	S6D02065E
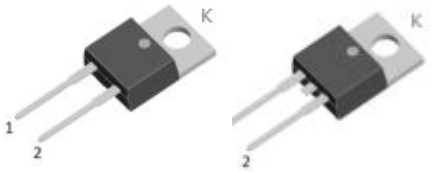	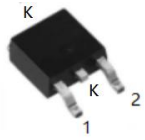
TO-220AC TO-220-2	DPAK (TO-252-2)
	

Technical Data
Data Sheet N2582, REV.-

RoHS

Maximum Ratings:

Characteristics	Symbol	Condition	Max.	Units
Peak Repetitive Reverse Voltage Working Peak Reverse Voltage DC Blocking Voltage	V_{RRM} V_{RWM} V_{DC}	-	650	V
Average Rectified Forward Current	$I_{F(AV)1}$	T_C =25°C	12.5	A
	$I_{F(AV)2}$	T_C =165°C	2	A
Repetitive Peak Forward Surge Current	I_{FRM1}	10ms, Half Sine pulse, T_C =25°C	12	A
	I_{FRM2}	10ms, Half Sine pulse, T_C =110°C	9	A
Peak One Cycle Non-Repetitive Surge Current	I_{FSM1}	10ms, Half Sine pulse, T_C =25°C	20	A
	I_{FSM2}	10ms, Half Sine pulse, T_C =110°C	15	A
Power Dissipation	P_{tot1}	T_C =25°C	60	W
	P_{tot2}	T_C =110℃	26	W

Electrical Characteristics:

Characteristics	Symbol	Condition	Typ.	Max.	Units
Forward Voltage Drop*	V_{F1}	@ 2A, Pulse, T_J = 25 °C	1.27	1.5	V
	V_{F2}	@ 2A, Pulse, T_J = 175 °C	1.4	1.6	V
Reverse Current at DC condition*	I_{R1}	@V_R = rated V_R T_J = 25 °C	0.3	3	uA
Reverse Current *	I_{R2}	@V_R = rated V_R T_J = 175 °C	6	25	uA
Junction Capacitance	C_T	V_R=0V, T_J=25℃,f=1MHz	170	-	pF
Reverse Recovery Charge	Q_c	I_F = 2A, di/dt = 200A/μs V_R = 400 V, T_J =25°C	10.60	-	nC
Capacitance Stored Energy	E_C	V_R = 400 V, T_J =25°C	2.60	-	μJ

* Pulse width < 300 μs, duty cycle < 2%

Thermal-Mechanical Specifications:

Characteristics	Symbol	Condition	S6D02065A	S6D02065E	Units
Junction Temperature	T_J	-	-55 to +175		°C
Storage Temperature	T_{stg}	-	-55 to +175		°C
Typical Thermal Resistance Junction to Case	$R_{\theta JC}$	DC operation	2.5	2.4	°C/W

Ordering Information

Device	Package	Shipping
S6D02065A	TO-220AC(TO-220-2)	50pcs /tube
S6D02065E	DPAK(TO-252-2)	3000pcs /reel

For information on tape and reel specifications, including part orientation and tape sizes, please refer to our tape and reel packaging specification.

Ratings and Characteristics Curves

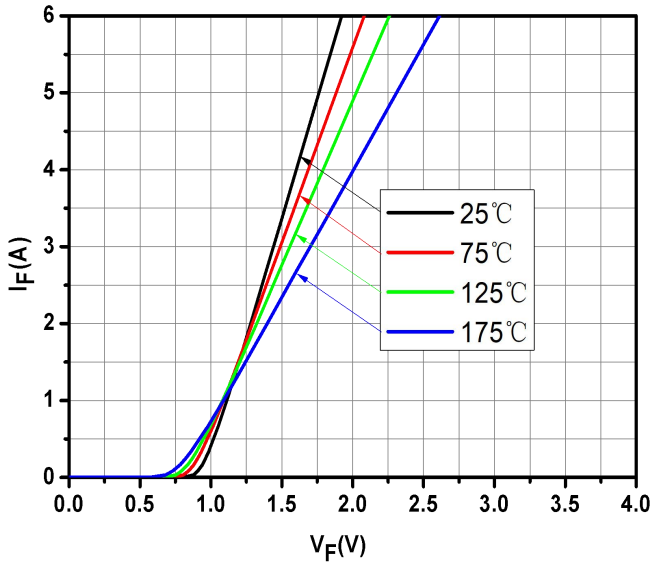

Fig.1-Typical Forward Voltage Characteristics

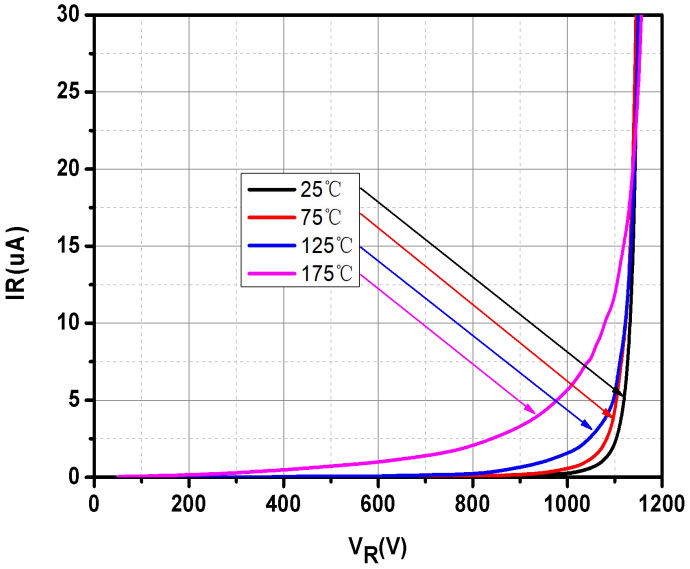

Fig.2-Typical Reverse Characteristics

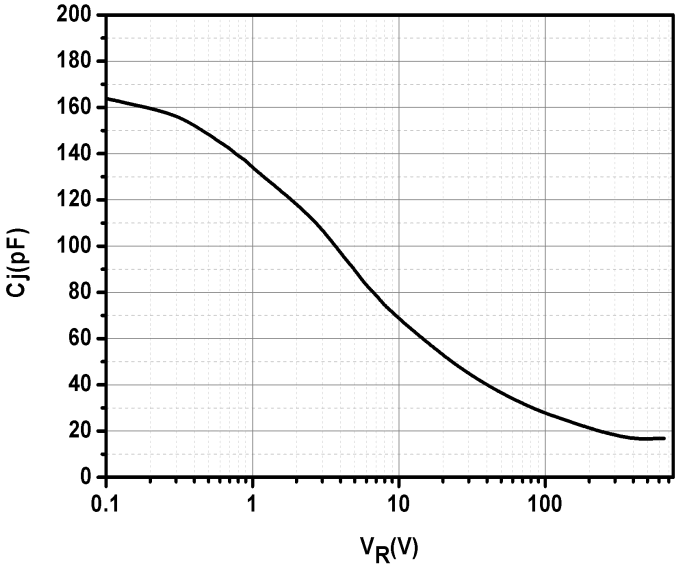

Fig.3-Capacitance vs. Reverse Voltage

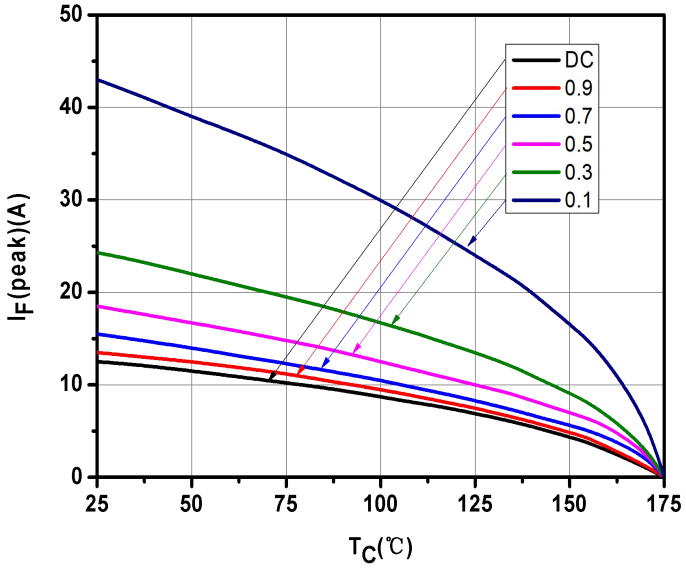

Fig.4-Current Derating

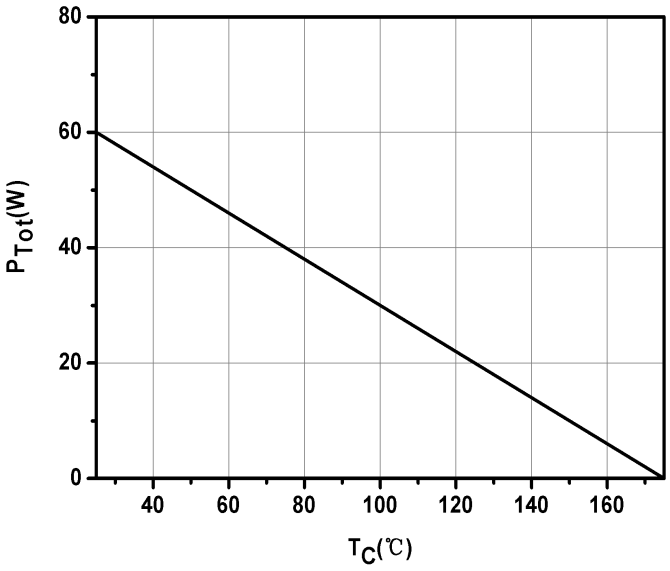

Fig.5-Power Derating

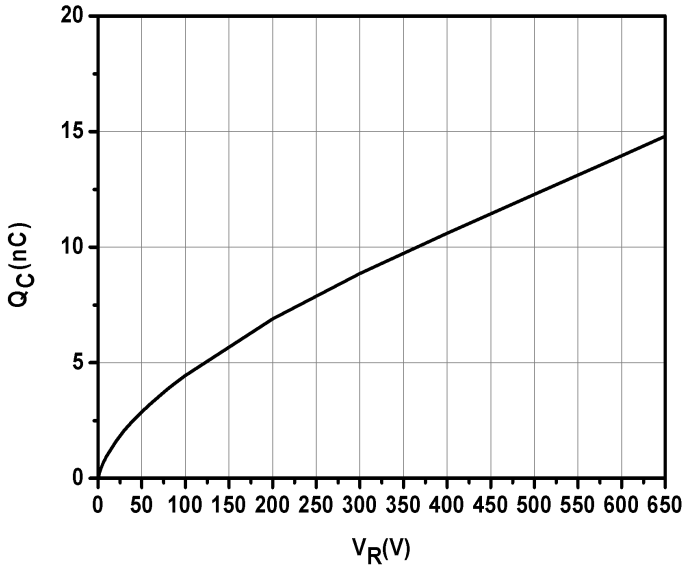

Fig.6-Total Capacitance Charge vs. Reverse Voltage

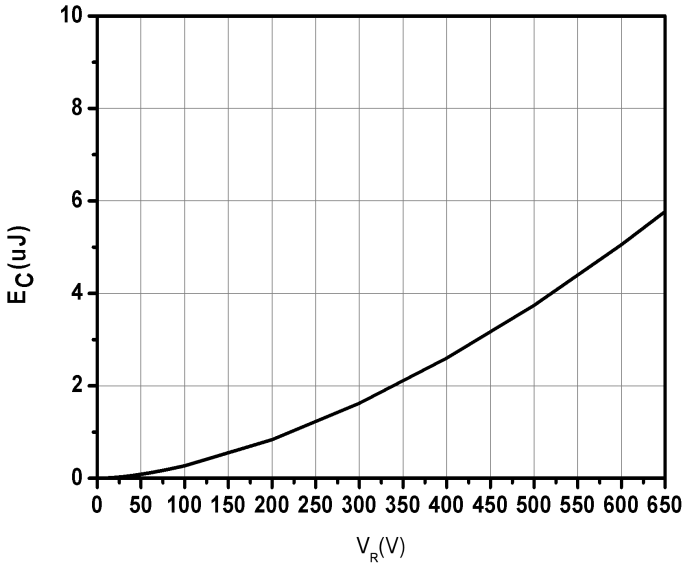

Fig.7-Capacitance Stored Energy vs. Reverse Voltage

Technical Data
Data Sheet N2582, REV.-

Marking Diagram

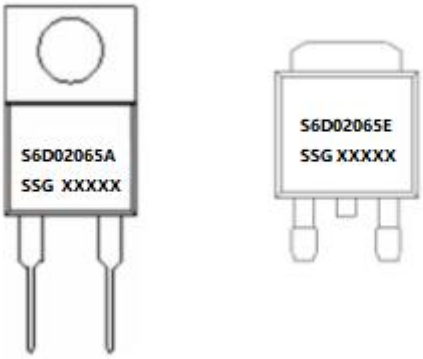

Where XXXXX is YYWWL

S6D = Device Type
A/E = Package type
02 = Forward Current (50A)
065 = Reverse Voltage (650V)
SSG = SSG
YY = Year
WW = Week
L = Lot Number

Cautions: Molding resin
Epoxy resin UL:94V-0

Tube Specification (TO-220-2)

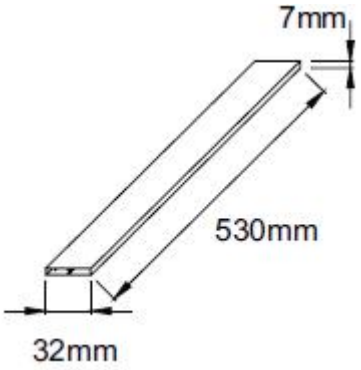

Carrier Tape & Reel Specification

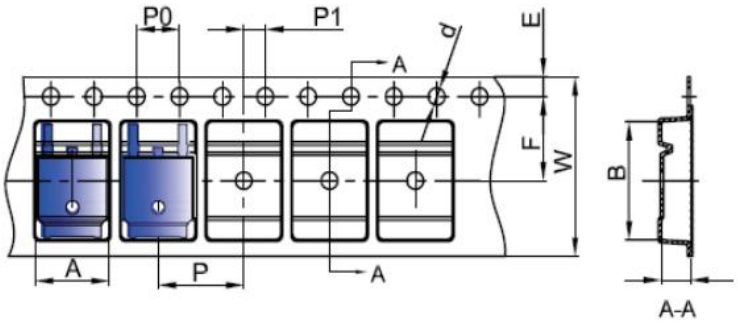

SYMBOL	Millimeters	
	Min.	Max.
A	6.80	7.00
B	10.40	10.60
C	2.60	2.80
d	Φ1.45	Φ1.65
E	1.65	1.85
F	7.40	7.60
P0	3.90	4.10
P	7.90	8.10
P1	1.90	2.10
W	15.90	16.30

Mechanical Dimensions TO-220AC

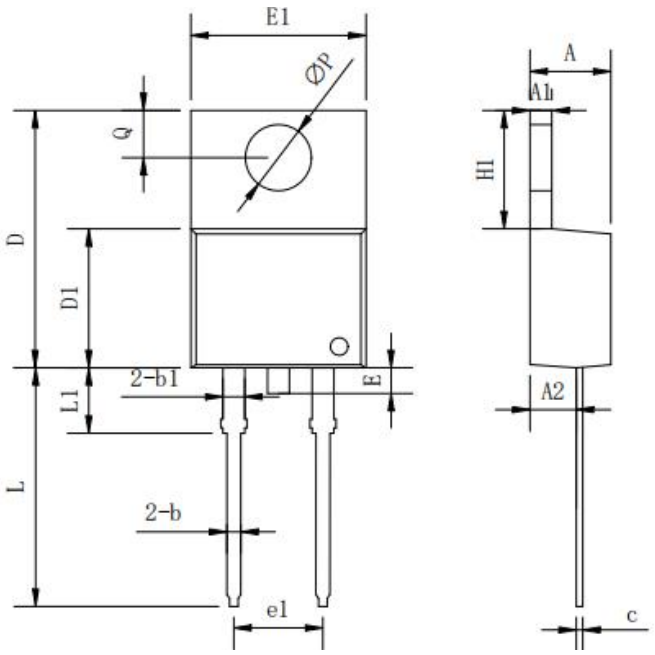

Symbol	Dimensions in millimeters		
	Min.	Typical	Max.
A	3.56	-	4.83
A1	0.51	-	1.40
A2	2.03	-	2.92
b	0.38	-	1.02
b1	1.14	-	1.78
c	0.31	-	0.61
D	14.22	-	16.51
D1	8.38	-	9.42
E	-	-	1.78
E1	9.65	10.16	10.67
e1	-	5.08	-
H1	5.84	-	6.86
L	12.70	-	14.73
L1	-	-	6.35
ΦP	-	3.56	-
Q	2.54	-	3.43

Mechanical Dimensions DPAK(TO-252-2)

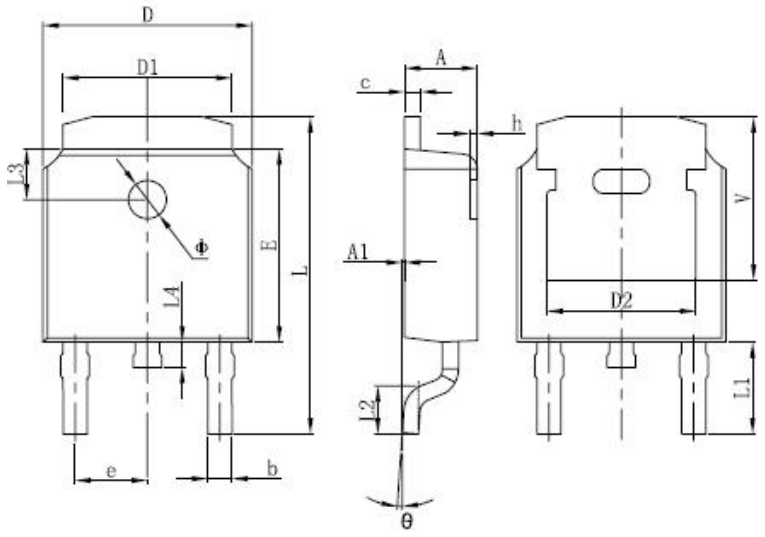

SYMBOL	Dimensions in millimeters		
	Min.	Typ.	Max.
A	2.18	-	2.39
A1	-	-	0.13
b	0.64	-	0.89
c	0.46	-	0.89
D	6.35	-	6.73
D1	4.95	-	5.46
D2	4.32	-	-
E	5.97	6.1	6.22
e	2.29BSC		
L	9.4	-	10.41
L1	2.90 REF.		
L2	1.4	1.52	1.78
L3	1.60 REF.		
L4	-	-	1.02
Φ	1.1	-	1.3
Θ	0°	-	10°
V	5.21	-	-

Technical Data
Data Sheet N2582, REV.-

DISCLAIMER:
1- The information given herein, including the specifications and dimensions, is subject to change without prior notice to improve product characteristics. Before ordering, purchasers are advised to contact the SMC Diode Solutions sales department for the latest version of the datasheet(s).
2- In cases where extremely high reliability is required (such as use in nuclear power control, aerospace and aviation, traffic equipment, medical equipment , and safety equipment) , safety should be ensured by using semiconductor devices that feature assured safety or by means of users' fail-safe precautions or other arrangement .
3- In no event shall SMC Diode Solutions be liable for any damages that may result from an accident or any other cause during operation of the user's units according to the datasheet(s). SMC Diode Solution assumes no responsibility for any intellectual property claims or any other problems that may result from applications of information, products or circuits described in the datasheets.
4- In no event shall SMC Diode Solutions be liable for any failure in a semiconductor device or any secondary damage resulting from use at a value exceeding the absolute maximum rating.
5- No license is granted by the datasheet(s) under any patents or other rights of any third party or SMC Diode Solutions.
6- The datasheet(s) may not be reproduced or duplicated, in any form, in whole or part, without the expressed written permission of SMC Diode Solutions.
7- The products (technologies) described in the datasheet(s) are not to be provided to any party whose purpose in their application will hinder maintenance of international peace and safety nor are they to be applied to that purpose by their direct purchasers or any third party. When exporting these products (technologies), the necessary procedures are to be taken in accordance with related laws and regulations.

Unikeyic Electronics

Global Electronic Components Distributor

Click to view pricing, inventory, delivery, and lifecycle information:

SMC:

5.0SMCJ60CA BZT52B5V1S MBRF2060CT UG2KB100 SF14G SST24A-800BW STD20100CE MBR30100 MBR4080CT SDURD1030 STB60100C 151CMQ045 83CNQ080 CESD24VD5 MBR60150CT 5.0SMCJ33A MBR40200WT MBRF10100CT MMSZ5261B SCT825B SDURB860A 3.0SMCJ22CA MB6F MBRB10200CT S2M0120120K SDUR1040 SMBJ33CATR 183NQ100R-1 MBR1550S S8ULCC36-2