● General Description

The AGMH12N10I combines advanced trench MOSFET technology with a low resistance package to provide extremely low $R_{DS(ON)}$.

This device is ideal for load switch and battery protection applications.

● Features

- Advance high cell density Trench technology
- Low $R_{DS(ON)}$ to minimize conductive loss
- Low Gate Charge for fast switching
- Low Thermal resistance
- 100% Avalanche tested
- 100% DVDS tested

● Application

- MB/VGA Vcore
- SMPS 2nd Synchronous Rectifier
- POL application
- BLDC Motor driver

Product Summary

BVDSS	RDSON	ID
100V	9.6mΩ	65A

TO-251 Pin Configuration

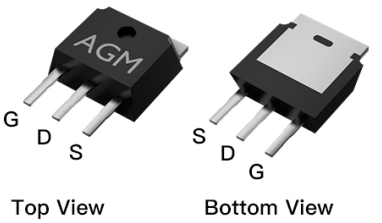

Top View Bottom View

AGMH12N10IS

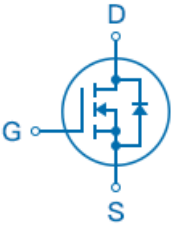

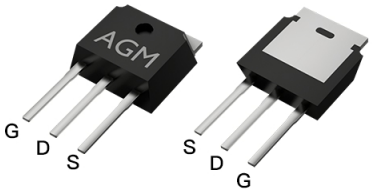

Top View Bottom View

AGMH12N10I

Package Marking and Ordering Information

Device Marking	Device	Device Package	Reel Size	Tape width	Quantity
AGMH12N10I	AGMH12N10I	TO-251	---	---	4500
AGMH12N10IS	AGMH12N10IS	TO-251	---	---	4500

Table 1. Absolute Maximum Ratings (TC=25℃)

Symbol	Parameter	Value	Unit
VDS	Drain-Source Voltage (VGS=0V)	100	V
VGS	Gate-Source Voltage (VDS=0V)	±20	V
ID	Drain Current-Continuous(Tc=25℃) **(Note 1)**	65	A
	Drain Current-Continuous(Tc=100℃)	39	A
IDM (pluse)	Drain Current-Pulsed **(Note 2)**	260	A
PD	Maximum Power Dissipation(Tc=25℃)	96	w
	Maximum Power Dissipation(Tc=100℃)	38	w
EAS	Avalanche energy **(Note 3)**	100	mJ
TJ,TSTG	Operating Junction and Storage Temperature Range	-55 To 150	℃

Table 2. Thermal Characteristic

Symbol	Parameter	Typ	Max	Unit
RθJA	Thermal Resistance Junction-ambient (Steady State)[1]	---	50	℃/W
RθJC	Thermal Resistance Junction-Case[1]	---	1.3	℃/W

Table 3. Electrical Characteristics (TJ=25℃unless otherwise noted)

Symbol	Parameter	Conditions	Min	Typ	Max	Unit
On/Off States						
BVDSS	Drain-Source Breakdown Voltage	VGS=0V ID=250μA	100	--	--	V
IDSS	Zero Gate Voltage Drain Current	VDS=100V,VGS=0V	--	--	1.0	μA
IGSS	Gate-Body Leakage Current	VGS=±20V,VDS=0V	--	--	±100	nA
VGS(th)	Gate Threshold Voltage	VDS=VGS,ID=250μA	2.5	3.0	4.0	V
gFS	Forward Transconductance	VDS=5V,ID=15A	--	22	--	S
RDS(on)	Drain-Source On-State Resistance	VGS=10V, ID=20A	--	9.6	13	mΩ
Dynamic Characteristics						
Ciss	Input Capacitance	VDS=40V,VGS=0V, F=1MHZ	--	1200	--	pF
Coss	Output Capacitance		--	460	--	pF
Crss	Reverse Transfer Capacitance		--	9.0	--	pF
Rg	Gate resistance	VGS=0V, VDS=0V,f=1.0MHz	--	11.5	--	Ω
Switching Times						
td(on)	Turn-on Delay Time	VGS=10V,VDS=50V, ID=10A,RGEN=5Ω	--	16	--	nS
tr	Turn-on Rise Time		--	18	--	nS
td(off)	Turn-Off Delay Time		--	32	--	nS
tf	Turn-Off Fall Time		--	10	--	nS
Qg	Total Gate Charge	VGS=10V, VDS=50V, ID=10A	--	21.8	--	nC
Qgs	Gate-Source Charge		--	3.7	--	nC
Qgd	Gate-Drain Charge		--	5.0	--	nC
Source-Drain Diode Characteristics						
ISD	Source-Drain Current(Body Diode)		--	--	65	A
VSD	Forward on Voltage	VGS=0V,IS=20A	--	--	1.2	V
trr	Reverse Recovery Time	Is=20A , VDD=50V,dI/dt=100A/μs	--	43	--	ns
Qrr	Reverse Recovery Charge		--	90	--	nc

Notes 1.The maximum current rating is package limited.

Notes 2.Repetitive Rating: Pulse width limited by maximum junction temperature

Notes 3.EAS condition: TJ=25℃,VDD=50V,Vgs=10V，ID=20A,L=0.5mH,RG=25ohm

Characteristics Curve:

Typ. output characteristics
$I_D=f(V_{DS})$

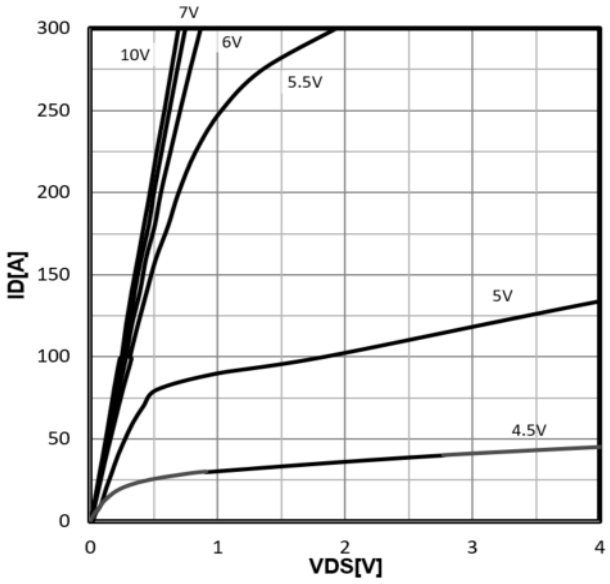

Typ. drain-source on resistance
$R_{DS(on)}=f(I_D)$

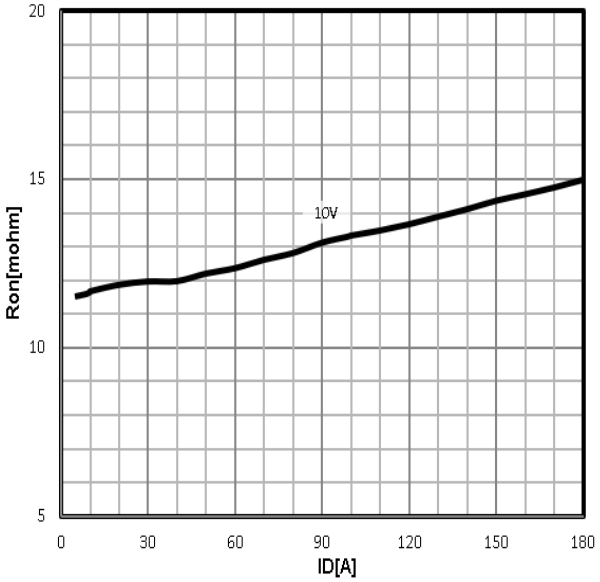

Typ. transfer characteristics
$I_D=f(V_{GS})$

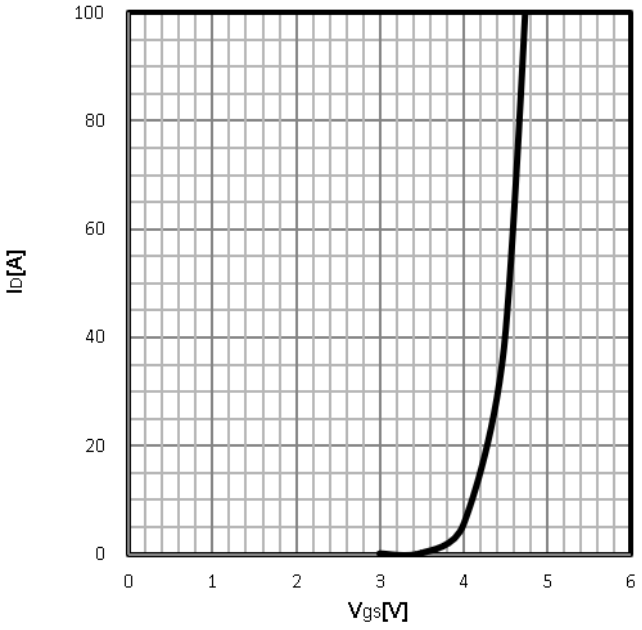

Drain-source on-state resistance
$R_{DS(on)}=f(T_j);I_D=20A;\ V_{GS}=10V$

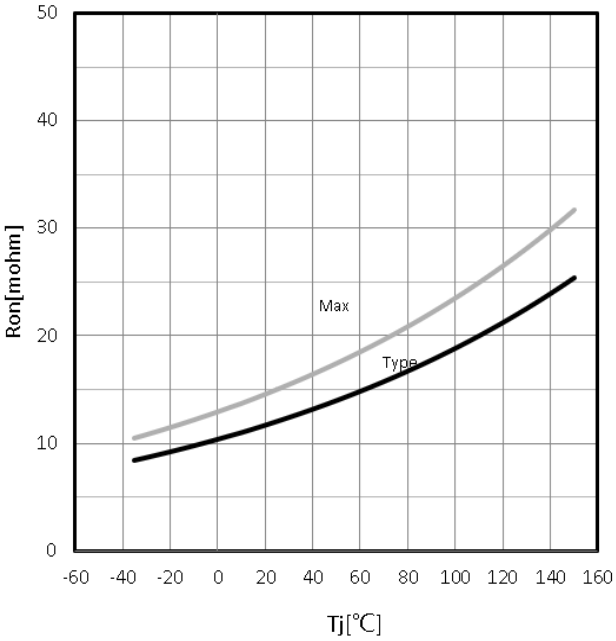

Gate Threshold Voltage
$V_{TH}=f(T_j)$; $I_D=250uA$

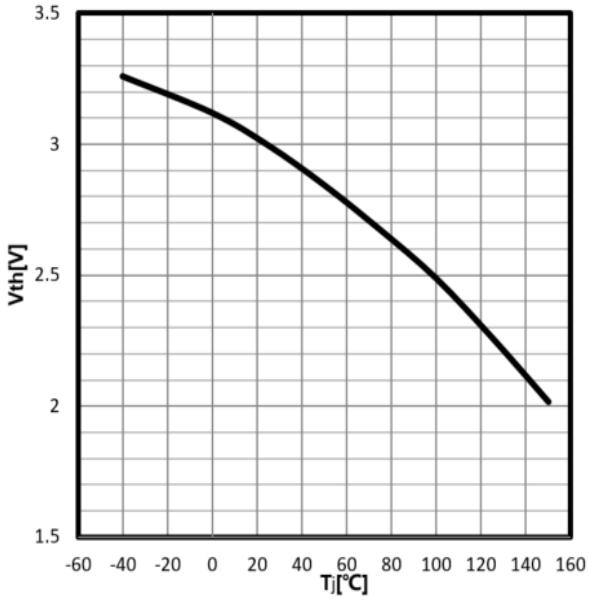

Drain-source breakdown voltage
$V_{BR(DSS)}=f(T_j)$; $I_D=250uA$

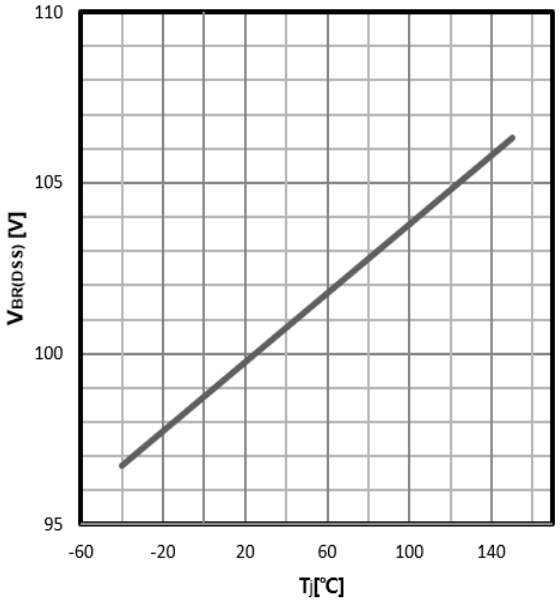

Typ. gate charge
$V_{GS}=f(Q_g)$; $I_D=10A$

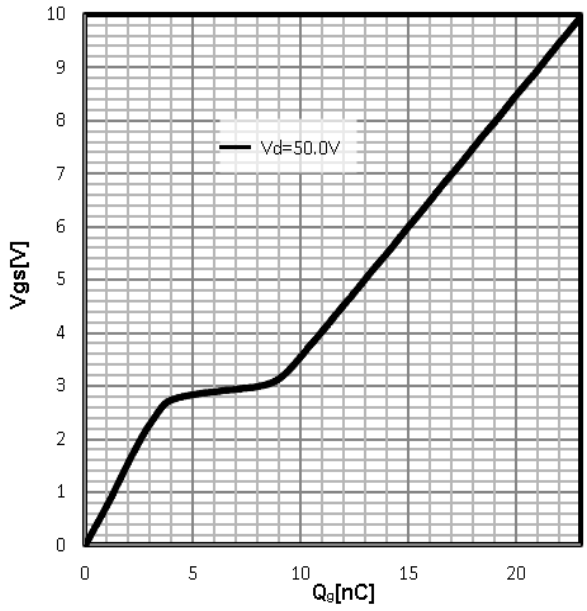

Typ. capacitances
C =f(V_{DS}); V_{GS}=0V; f =1MHz

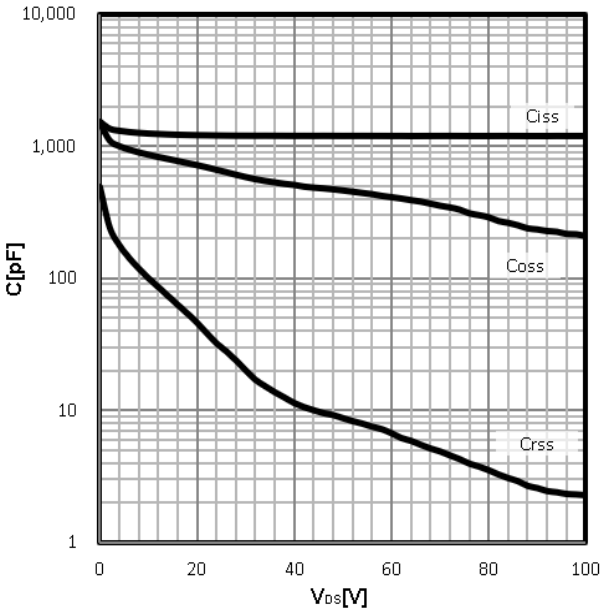

Power Dissipation

$P_{tot}=f(T_C)$

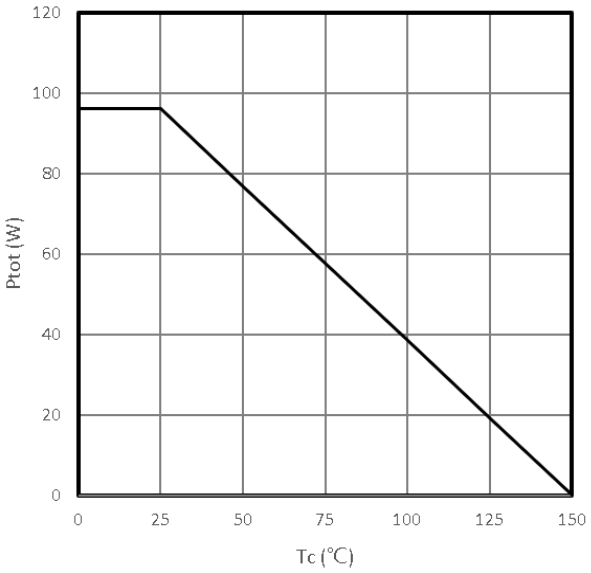

Maximum Drain Current

$I_D=f(T_C)$

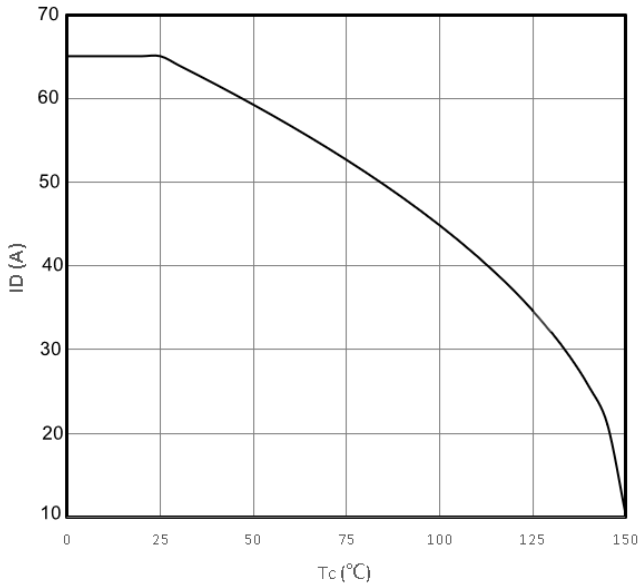

Safe operating area

$I_D=f(V_{DS})$

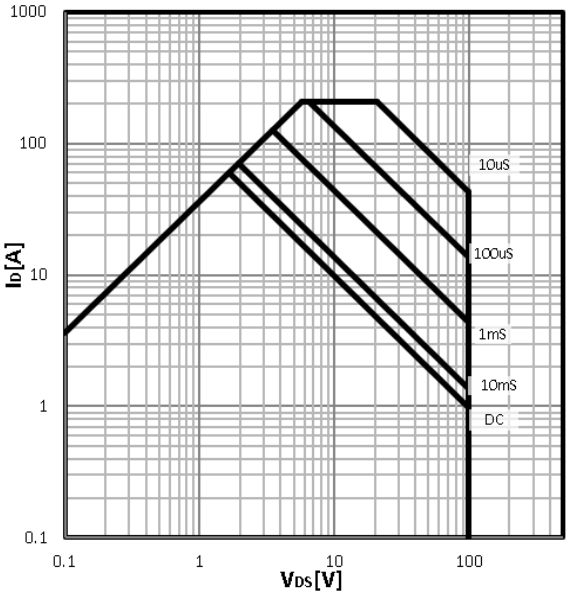

Body Diode Forward Voltage Variation

$I_F=f(V_{GS})$

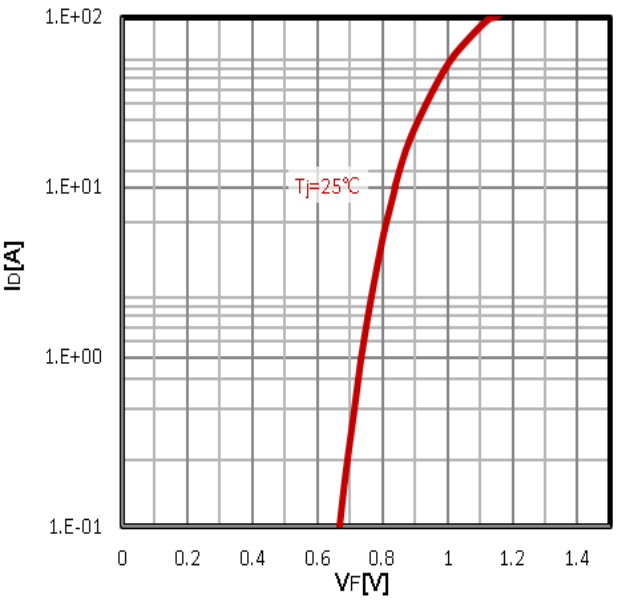

Max. transient thermal impedance

$Z_{thJC}=f(t_p)$

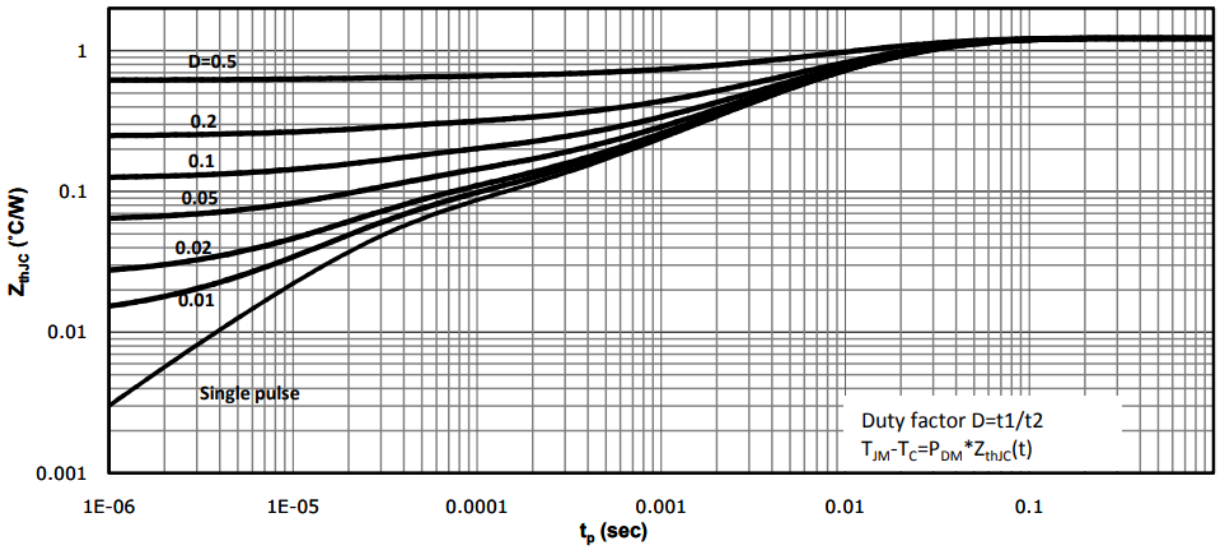

Test Circuit and Waveform:

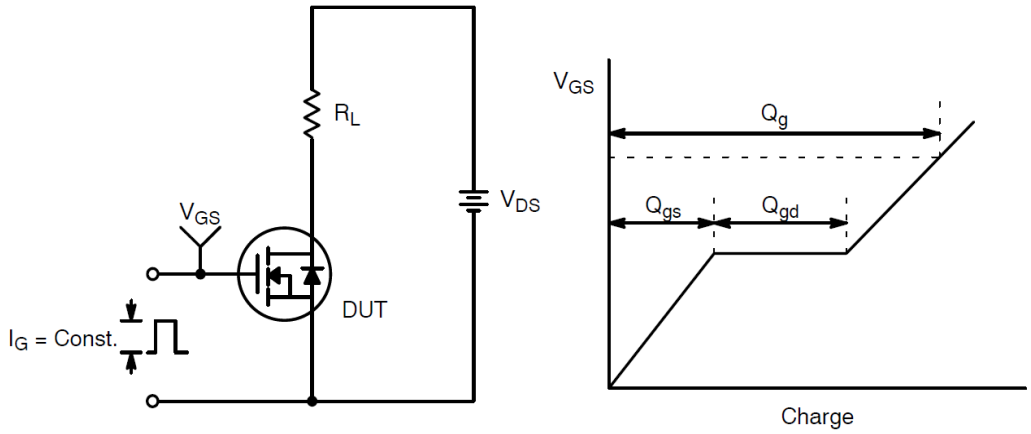

Gate Charge Test Circuit & Waveform

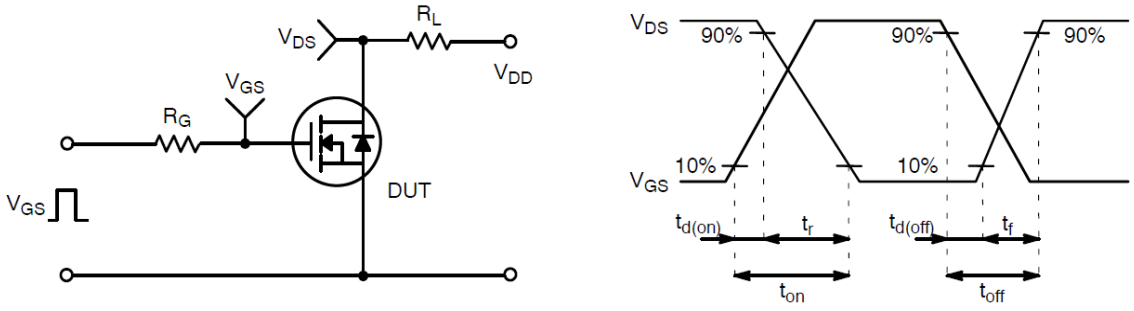

Resistive Switching Test Circuit & Waveforms

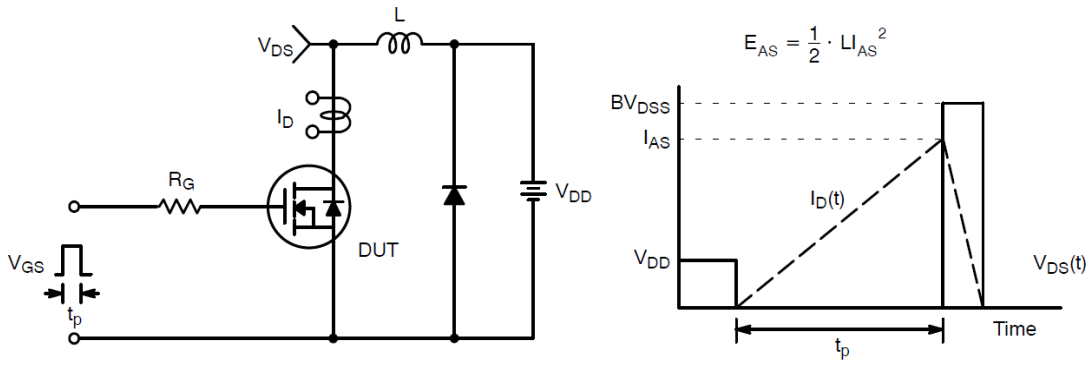

Unclamped Inductive Switching Test Circuit & Waveforms

TO-251 Package Outline Data

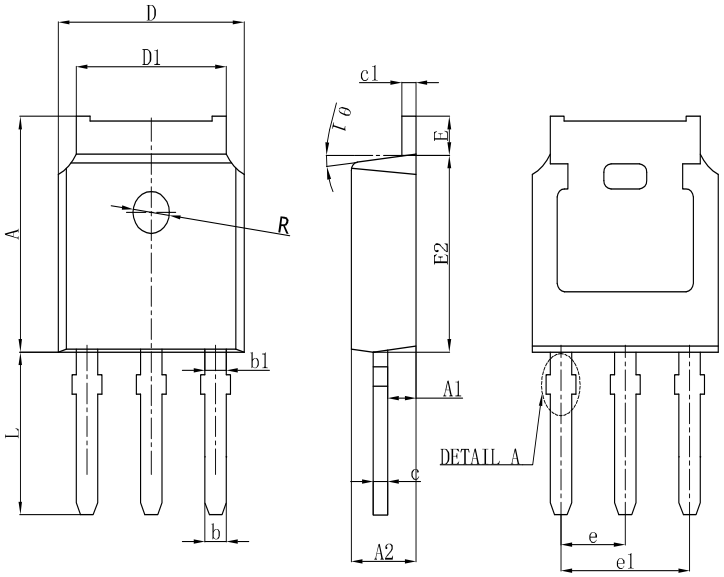

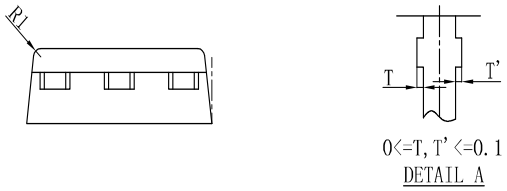

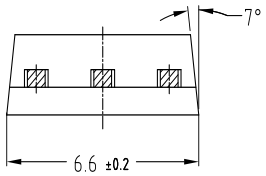

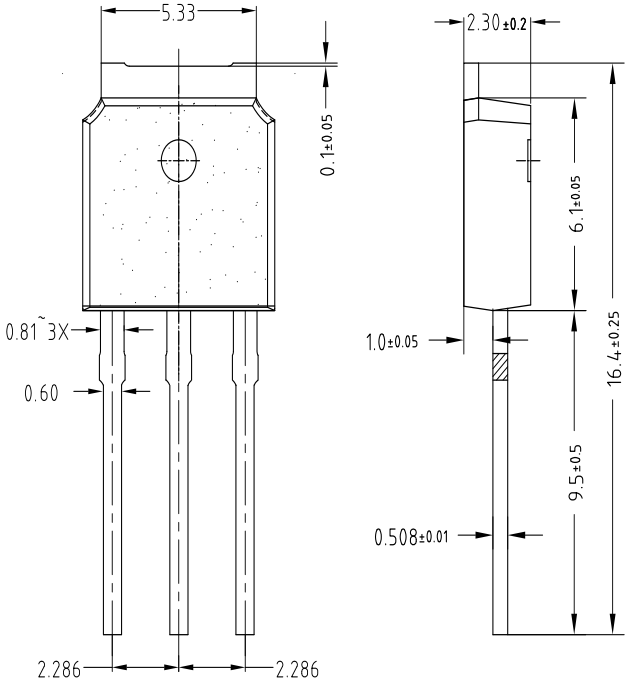

SYMBOL	MILLIMETER		
	MIN	NOM	MAX
A	7.050	7.100	7.150
A1	0.960	1.010	1.060
A2	2.250	2.300	2.350
b		0.760REF.	
b1		1.000REF.	
c		0.508REF.	
c1		0.508REF.	
D	6.550	6.600	6.650
D1	5.220	5.320	5.420
E	0.950	1.000	1.050
E2	6.050	6.100	6.150
e		2.286BSC	
e1		4.572REF.	
L	4.800	5.000	5.200
θ1		7° REF.	
R		1.300REF.	
R1		0.250REF.	

TO-251
Marking Instructions:

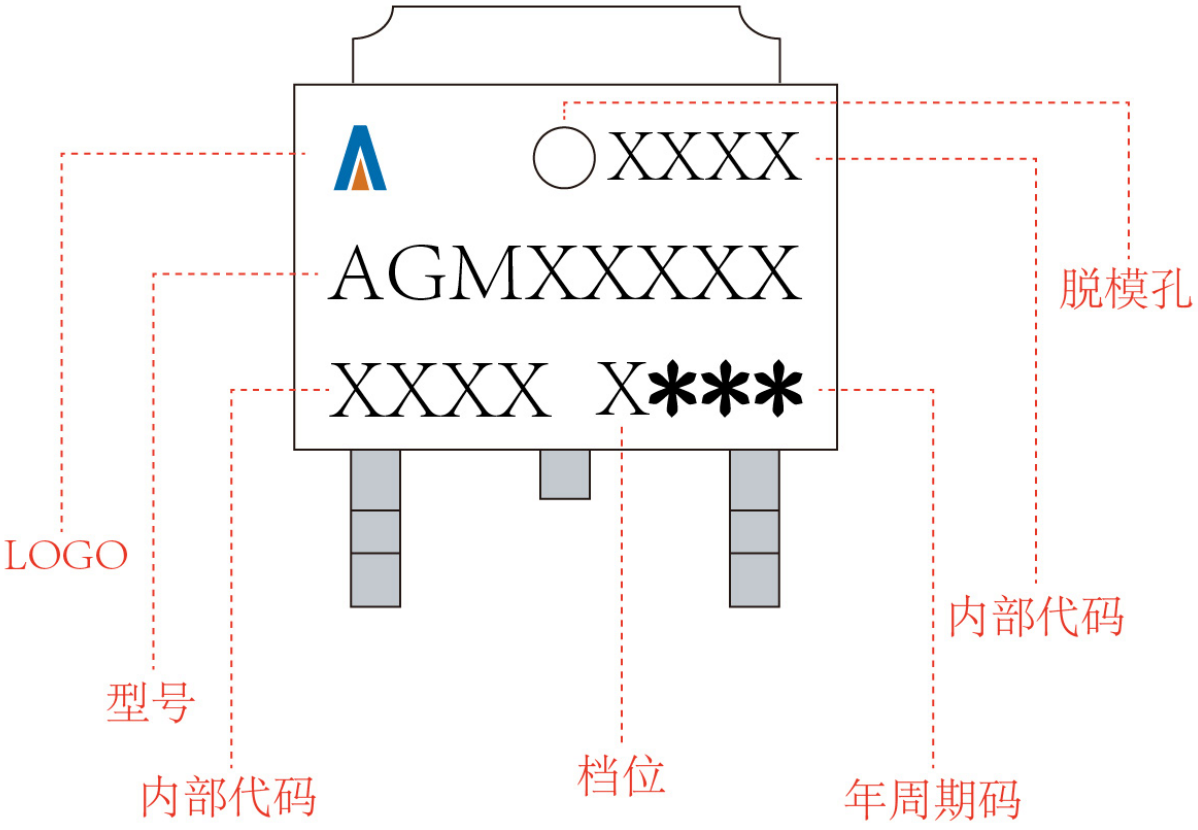

Disclaimer:

The information provided in this document is believed to be accurate and reliable. However,Shenzhen Core Control Source Electronics Technology Co., Ltd. does not assume any responsibility for the following consequences.Do not consider the use of such information or use beyond its scope.

The information mentioned in this document may be changed at any time without notice.

The products and information provided in this document do not infringe patents. Shenzhen Core Control Source Electronics Technology Co., Ltd. assumes no responsibility for any infringement of any other rights of third parties.The result of using such products and information.

This document is the second version issued on April 10th, 2024. This document replaces all previously provided information.

AGMSEMi It is a registered trademark of Shenzhen Core Control Source Electronics Technology Co., Ltd.

Copyright © 2017 Shenzhen Core Control Source Electronics Technology Co., Ltd. all rights reserved.

Unikeyic Electronics

Global Electronic Components Distributor

Click to view pricing, inventory, delivery, and lifecycle information:

AGMSEMI:

AGM306A AGM314MAP AGM405AP1 AGM420MC AGM15T13A AGM304AP AGM015N10LL AGM042N10D AGM311MAP AGM403A1 AGM60P90D AGM628MD AGM18N10AP AGM306AP AGM420MA AGM605Q AGM305AP AGM310MA AGM420MBA AGM500P20D AGM612MN AGM30P35AP AGM60P100A AGM1010A-E AGM4005LLM1 AGM60P90A AGM30P08AP AGM40P100A AGM6014AP AGM60P85AP