标 记 MARK	ECN编号/变更内容 ECN NO/DEFINITION	修 改 REVISE	日 期 DATE	核 准 APPROVE

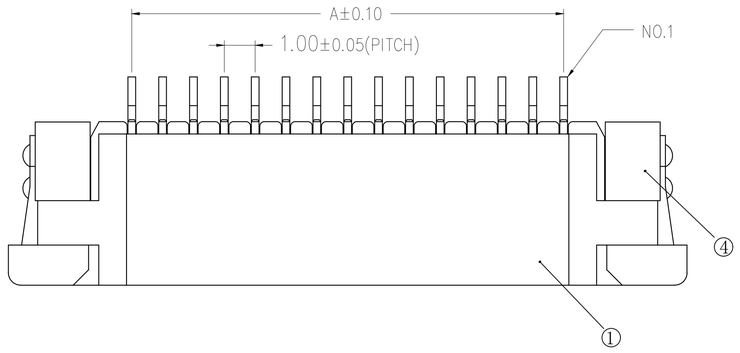

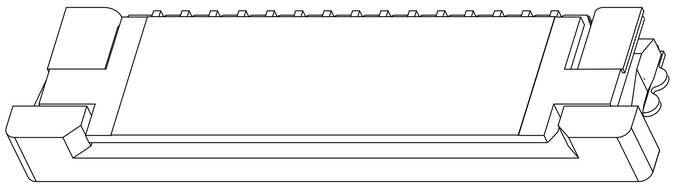

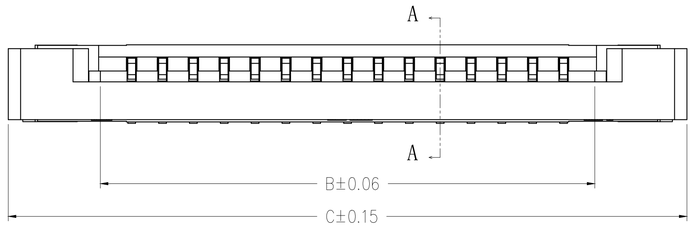

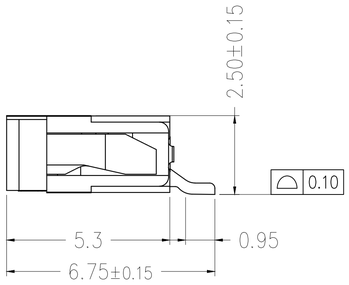

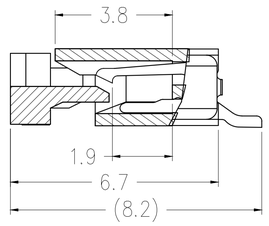

SECTION A-A

CKI	DIM A	DIM B	DIM C
4	3.00	5.06	11.10
5	4.00	6.06	12.10
6	5.00	7.06	13.10
7	6.00	8.06	14.10
8	7.00	9.06	15.10
9	8.00	10.06	16.10
10	9.00	11.06	17.10
11	10.00	12.06	18.10
12	11.00	13.06	19.10
13	12.00	14.06	20.10
14	13.00	15.06	21.10
15	14.00	16.06	22.10
16	15.00	17.06	23.10
17	16.00	18.06	24.10
18	17.00	19.06	25.10
19	18.00	20.06	26.10
20	19.00	21.06	27.10
21	20.00	22.06	28.10
22	21.00	23.06	29.10
23	22.00	24.06	30.10
24	23.00	25.06	31.10
25	24.00	26.06	32.10
26	25.00	27.06	33.10
27	26.00	28.06	34.10
28	27.00	29.06	35.10
29	28.00	30.06	36.10
30	29.00	31.06	37.10
32	31.00	33.06	39.10

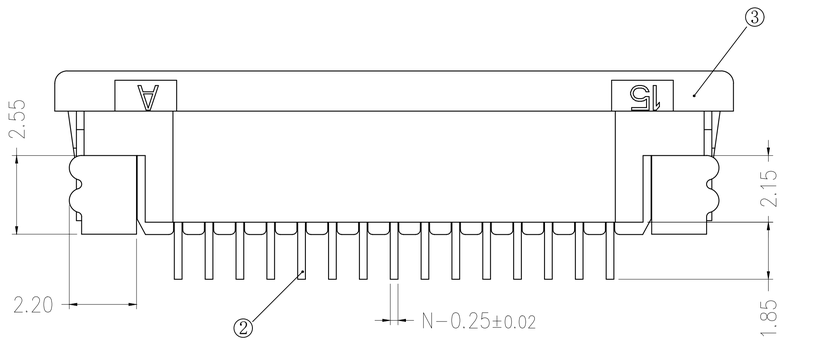

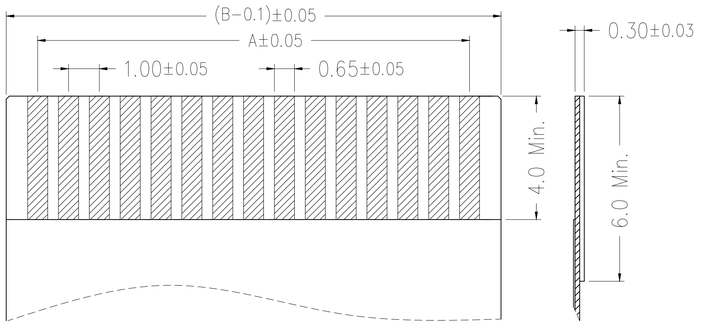

适用扁平线(Applicable Flat Cable)

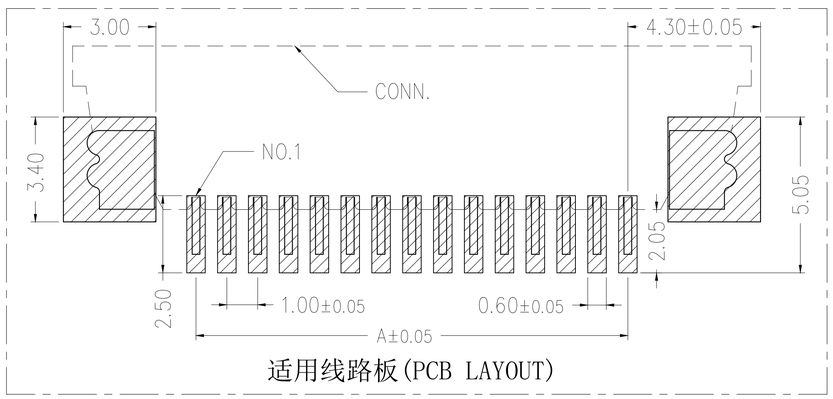

适用线路板(PCB LAYOUT)

技术指标(Technical Index):

1. 塑件表面应光洁、无毛边、无明显收缩、 缺陷、裂纹等现象.(The surface of the plastic parts should be smooth, no rough edges, no obvious shrinkage, defects, cracks and other phenomena.)
2. 温度范围(Temperature range): -25° C~85° C.
3. 额定电压(Rated voltage): 50V, AC/DC(=等效).
4. 接触电阻(Contact resistance): ≤0.03Ω.
5. 绝缘电阻(Insulation resistance): ≥500MΩ.

序 号	品 名	材 质	电镀/颜色	备 注
2	端子	铜	镀锡	
1	胶芯	LCP	黑色	

深圳市虹成电子有限公司		品 名 TITLE	FPC座		
		料 号 PART NO	HC-FPC-1.0-17P-CSH25		
GENERAL TOLERANCES (UNLESS SPECIFIED)	比 列 SCALE	1:1			
X. ±.50 .XX ±.10	单 位 UNIT	MM	制 图 DRAW	AhYe	
.X ±.20 .XXX ±.05	张 数 PART NO	1 OF 1	审 核 CHECKED	夏操云	
ANGLES ±1°	版 本 REV	A	批 准 APPROVE	赵亮亮	

Unikeyic Electronics

Global Electronic Components Distributor

Click to view pricing, inventory, delivery, and lifecycle information:

HC:

HC-USB3.0-C26 HCZZ0576-5 HC-PZ254-13.8L-1x6PWA HC-USB3.0-L257-J HCZZ0514-6
HC-PM254-8.5H-2x30PZ HC-PHB2.0-2x4AW HC-PZ254-11.5L-1x20PZ HC-FPC-0.5-24P-FH20
HC-FPC-0.5-50P-FHH20 HC-USB3.0-C34-P HC-FPC-0.5-40P-FH20 HC-PM200-4.3H-2x8PS
HC-PM254-8.5H-2x20PS HC-PZ127-7.2L-2x3PS HC-PZ254-11.5L-1x10PZ HC-PZ254-11.5L-2x18PZ
HC-PM200-4.3H-2x6PS HCZZ0032-6 HC-FPC-0.5-6P-CSH20 HC-USB2.0-L100-093P HCZZ0001-2
HCZZ0451-6 HC-FPC-0.5-10P-FH20 HC-PM200-4.3H-2x20PZ HC-USB3.0-L175-2X1-J HCZZ0451-4
HC-PHB2.0-2x5A HC-PM254-5.0H-2x10PZ HC-PM254-8.5H-1x21PZ