REV.	ECN NO.	DATE	SIGN	DESCRIPTION
C	LE3-8C0071	2008/11/07	Tommy	Change to pin hole
D	LEN1730294	2017/03/20	Ruru	Change Logo
E	C190274	2019/02/21	Ruru	Modify Note

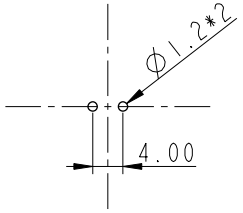

2Pin Male Connector
Female Pin PCB Layout

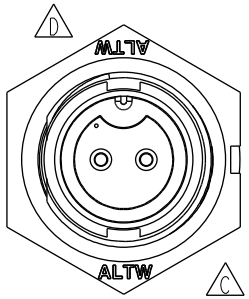

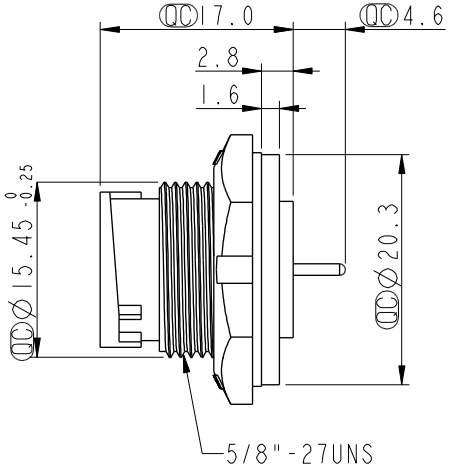

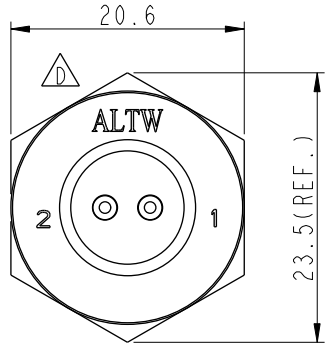

A L T W
CONFIDENTIAL
2019-02-21
R&D DEPT.

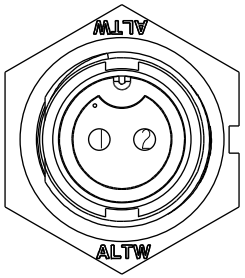

Pin Assignments
Front View

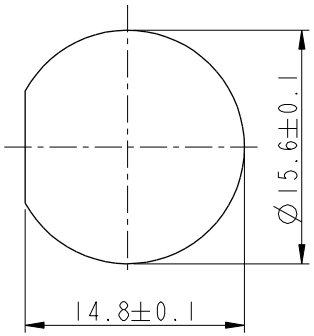

Recommended Panel Cut-Out

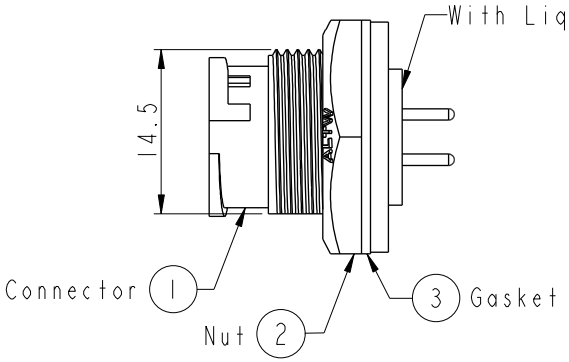

Note: E
* QC Important Dimensions To Check.
* Waterproof Rate: IP67, Unmated
* Housing: Thermoplastic, Black
* Pin: Copper Alloy, Gold Plated
* Nut: Thermoplastic, Black
* Gasket: Rubber, Black
B * Use with Waterproof Cap or Dustcap
Panel Thickness Max: 3.0mm
B * Use without Waterproof Cap or Dustcap
Panel Thickness Max: 4.0mm
* Gasket and Nut are packed separately in PE bags.

UNIT: mm

TOLERANCE
.X ±0.25
.XX ±0.1
.XXX ±0.05
ANGLES ±1°

TITLE: Standard Panel Lock 2Pin M Conn F Pin
SCALE: 1:1 | SIZE: A4 | SHEET: 1 OF 1
REV.: E | WC-REV.: A.3 | QC: Inspection item

Amphenol LTW
安費諾亮泰企業股份有限公司

ITEM NO	DRAWN BY	DATE
BD-02PMFP-LC7001	Ruru	2019-02-21
DWG NO: BD-02PMFP-LC7001	CHECKED BY: Rita	DATE: 2019-02-21
CUSTOMER: ALTW	APPROVED BY: Max	DATE: 2019-02-21

THIS DOCUMENT IS SUBJECT TO CHANGE WITHOUT NOTICE. IT IS CONFIDENTIAL AND A PROPERTY OF Amphenol LTW. DISCLOSURE TO THIRD PARTY HAS TO BE AUTHORIZED BY Amphenol LTW.

Mouser Electronics

Authorized Distributor

Click to View Pricing, Inventory, Delivery & Lifecycle Information:

Amphenol:
BD-02PMFP-LC7001