LC02H (BA)
EVB User Guide

GNSS Module Series

Version: 1.0

Date: 2023-07-25

Status: Released

At Quectel, our aim is to provide timely and comprehensive services to our customers. If you require any assistance, please contact our headquarters:

Quectel Wireless Solutions Co., Ltd.
Building 5, Shanghai Business Park Phase III (Area B), No.1016 Tianlin Road, Minhang District, Shanghai 200233, China
Tel: +86 21 5108 6236
Email: info@quectel.com

Or our local offices. For more information, please visit:
http://www.quectel.com/support/sales.htm.

For technical support, or to report documentation errors, please visit:
http://www.quectel.com/support/technical.htm.
Or email us at: support@quectel.com.

Legal Notices

We offer information as a service to you. The provided information is based on your requirements and we make every effort to ensure its quality. You agree that you are responsible for using independent analysis and evaluation in designing intended products, and we provide reference designs for illustrative purposes only. Before using any hardware, software or service guided by this document, please read this notice carefully. Even though we employ commercially reasonable efforts to provide the best possible experience, you hereby acknowledge and agree that this document and related services hereunder are provided to you on an “as available” basis. We may revise or restate this document from time to time at our sole discretion without any prior notice to you.

Use and Disclosure Restrictions

License Agreements

Documents and information provided by us shall be kept confidential, unless specific permission is granted. They shall not be accessed or used for any purpose except as expressly provided herein.

Copyright

Our and third-party products hereunder may contain copyrighted material. Such copyrighted material shall not be copied, reproduced, distributed, merged, published, translated, or modified without prior written consent. We and the third party have exclusive rights over copyrighted material. No license shall be granted or conveyed under any patents, copyrights, trademarks, or service mark rights. To avoid ambiguities, purchasing in any form cannot be deemed as granting a license other than the normal non-exclusive, royalty-free license to use the material. We reserve the right to take legal action for noncompliance with abovementioned requirements, unauthorized use, or other illegal or malicious use of the material.

Trademarks

Except as otherwise set forth herein, nothing in this document shall be construed as conferring any rights to use any trademark, trade name or name, abbreviation, or counterfeit product thereof owned by Quectel or any third party in advertising, publicity, or other aspects.

Third-Party Rights

This document may refer to hardware, software and/or documentation owned by one or more third parties ("third-party materials"). Use of such third-party materials shall be governed by all restrictions and obligations applicable thereto.

We make no warranty or representation, either express or implied, regarding the third-party materials, including but not limited to any implied or statutory, warranties of merchantability or fitness for a particular purpose, quiet enjoyment, system integration, information accuracy, and non-infringement of any third-party intellectual property rights with regard to the licensed technology or use thereof. Nothing herein constitutes a representation or warranty by us to either develop, enhance, modify, distribute, market, sell, offer for sale, or otherwise maintain production of any our products or any other hardware, software, device, tool, information, or product. We moreover disclaim any and all warranties arising from the course of dealing or usage of trade.

Privacy Policy

To implement module functionality, certain device data are uploaded to Quectel's or third-party's servers, including carriers, chipset suppliers or customer-designated servers. Quectel, strictly abiding by the relevant laws and regulations, shall retain, use, disclose or otherwise process relevant data for the purpose of performing the service only or as permitted by applicable laws. Before data interaction with third parties, please be informed of their privacy and data security policy.

Disclaimer

a) We acknowledge no liability for any injury or damage arising from the reliance upon the information.
b) We shall bear no liability resulting from any inaccuracies or omissions, or from the use of the information contained herein.
c) While we have made every effort to ensure that the functions and features under development are free from errors, it is possible that they could contain errors, inaccuracies, and omissions. Unless otherwise provided by valid agreement, we make no warranties of any kind, either implied or express, and exclude all liability for any loss or damage suffered in connection with the use of features and functions under development, to the maximum extent permitted by law, regardless of whether such loss or damage may have been foreseeable.
d) We are not responsible for the accessibility, safety, accuracy, availability, legality, or completeness of information, advertising, commercial offers, products, services, and materials on third-party websites and third-party resources.

Copyright © Quectel Wireless Solutions Co., Ltd. 2023. All rights reserved.

Safety Information

The following safety precautions must be observed during all phases of operation, such as usage, service, or repair of any terminal or mobile incorporating the module. Manufacturers of the terminal should notify users and operating personnel of the following safety precautions by incorporating them into all product manuals. Otherwise, Quectel assumes no liability for customers' failure to comply with these precautions.

	Ensure that the product may be used in the country and the required environment, as well as that it conforms to the local safety and environmental regulations.
	Keep away from explosive and flammable materials. The use of electronic products in extreme power supply conditions and locations with potentially explosive atmospheres may cause fire and explosion accidents.
	The product must be powered by a stable voltage source, while the wiring must conform to security precautions and fire prevention regulations.
	Proper ESD handling procedures must be followed throughout the mounting, handling and operation of any devices and equipment incorporating the module to avoid ESD damages.

About the Document

Document Information	
Title	**LC02H (BA) EVB User Guide**
Subtitle	GNSS Module Series
Document Type	EVB User Guide
Document Status	Released

Revision History

Version	Date	Description
-	2023-06-30	Creation of the document
1.0	2023-07-25	First official release

Contents

Safety Information **3**
About the Document **4**
Contents **5**
Table Index **6**
Figure Index **7**

1 Introduction **8**
1.1. Special Mark 8

2 General Overview **9**
2.1. EVB Kit 9
2.2. Connect Cables and Antenna to EVB 10

3 EVB Interfaces **12**
3.1. EVB Top View 12
3.2. EVB Interfaces 13

4 Testing and Firmware Upgrading via QGNSS Tool **16**
4.1. Test via QGNSS 16
4.2. QGNSS Interface Explanation 17
4.3. Firmware Upgrading 19

5 EVB and Antenna Installation **23**
5.1. GNSS Antenna Installation 23
5.2. EVB Installation 24

6 Measuring Power Consumption **25**
6.1. Power Consumption at Different Stages 25
6.2. VCC Power Consumption Measurement 25
6.3. V_BCKP Power Consumption Measurement 27

7 EVB Framework **30**

8 Common Problems and Troubleshooting **31**

9 Cautions **32**

10 Appendix References **33**

Table Index

Table 1: List of Kit Components 10
Table 2: Detailed EVB Interfaces 13
Table 3: J204 Pin Description..... 14
Table 4: QGNSS Interface Explanation..... 18
Table 5: Related Documents 33
Table 6: Terms and Abbreviations 33

Figure Index

Figure 1: EVB Kit Components 9
Figure 2: EVB and Components Assembly 11
Figure 3: EVB Top View 12
Figure 4: COM Port and Baud Rate Setting 16
Figure 5: QGNSS Interface (Connected) 17
Figure 6: Tool Startup 19
Figure 7: Tool Setting 20
Figure 8: Firmware Selecting 20
Figure 9: Firmware Upgrading – 1 21
Figure 10: Firmware Upgrading – 2 21
Figure 11: Successful Firmware Upgrading 22
Figure 12: Standard Installation Example – Front View 23
Figure 13: Standard Installation Example – Top View 24
Figure 14: Power Consumption at Different Stages 25
Figure 15: VCC Power Consumption Measured with Ammeter 26
Figure 16: VCC Power Consumption Measured with Power Consumption Meter 27
Figure 17: V_BCKP Power Consumption Measured with Ammeter 28
Figure 18: V_BCKP Power Consumption Measured with Power Consumption Meter 28
Figure 19: EVB Framework 30

1 Introduction

This document provides information on the steps needed to evaluate the Quectel LC02H (BA) module by using the Evaluation Board (EVB). The EVB is a convenient tool that allows you to become familiar with the LC02H (BA) module.

Specifically, the document is divided into several sections:

- Chapter 2 provides the general overview of EVB kit.
- Chapter 3 describes the EVB interfaces.
- Chapter 4 describes how to test the module and upgrade firmware via QGNSS tool.
- Chapter 5 describes the installation of EVB and antenna.
- Chapter 6 describes how to measure power consumption for the module.
- Chapter 7 provides the EVB framework.
- Chapter 8 describes the common problems and troubleshooting.
- Chapter 9 describes the cautions.
- Chapter 10 is an appendix, which summarizes the relevant documents, terms and abbreviations appearing herein.

NOTE

Request QGNSS software tool from Quectel Technical Support (support@quectel.com).

1.1. Special Mark

Table 1: Special Mark

Mark	Definition
*	Unless otherwise specified, when an asterisk (*) is used after a function, feature, interface, pin name, or argument, it indicates that the function, feature, interface, pin, or argument is under development and currently not supported; and the asterisk (*) after a model indicates that the sample of the model is currently unavailable.

2 General Overview

2.1. EVB Kit

The EVB kit includes: Evaluation Board (EVB), active GNSS antennas, Type-B USB cables, bolts and coupling nuts.

The EVB kit components are shown in the figure below. Check *Table 2: List of Kit Components* for details.

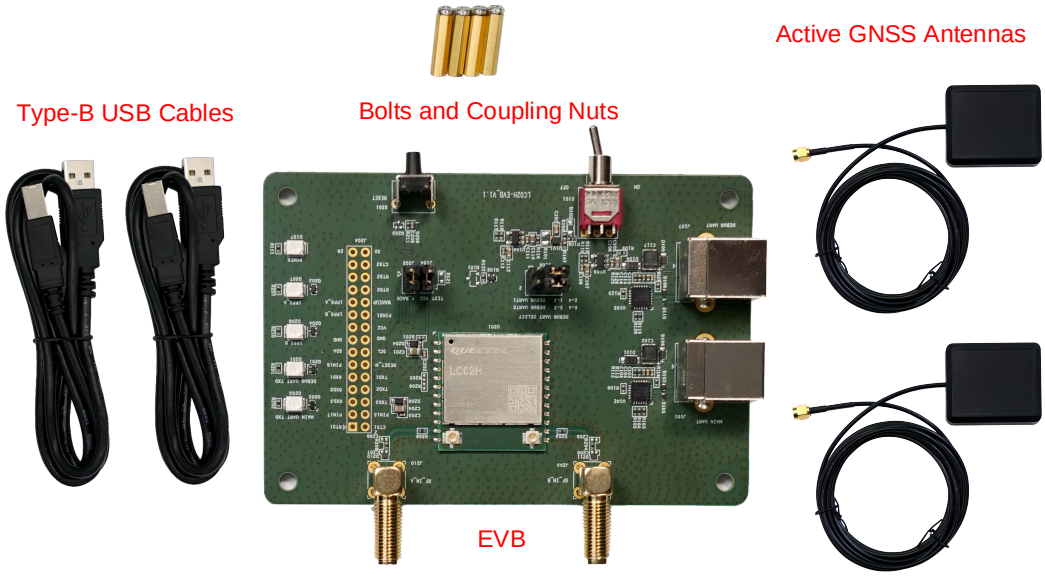

Figure 1: EVB Kit Components

Table 2: List of Kit Components

Items	Description	Quantity
EVB	Evaluation Board Size: 68 mm × 100 mm	1
USB Cable	Type-B USB Cable	2
Active GNSS Antenna	Active GNSS Antenna: YEGM020AA Antenna Size: 47 mm × 55 mm × 16.2 mm Cable Length: 3000 mm The GNSS antenna supports: ● GPS L1 C/A ● GLONASS L1 ● Galileo E1 ● BDS B1I, B1C* ● QZSS L1 C/A ● SBAS L1	2
Other	Bolts and Coupling Nuts	4 pairs

NOTE

Request Quectel Technical Support (support@quectel.com) for details about Quectel Active GNSS Antenna.

2.2. Connect Cables and Antenna to EVB

The connection between the EVB and its components is shown in the figure below.



Figure 2: EVB and Components Assembly

NOTE

1. Make sure that the "**MAIN UART**" interface (J101) on the EVB is connected to PC. It is optional to connect PC and the "**DEBUG UART**" (J107) on the EVB via Type-B USB. For more information, see *Chapter 3.2 EVB Interfaces*.
2. Make sure that the active GNSS antenna is placed with a clear line of sight to the sky.

3 EVB Interfaces

3.1. EVB Top View

EVB top view is shown in the figure below.

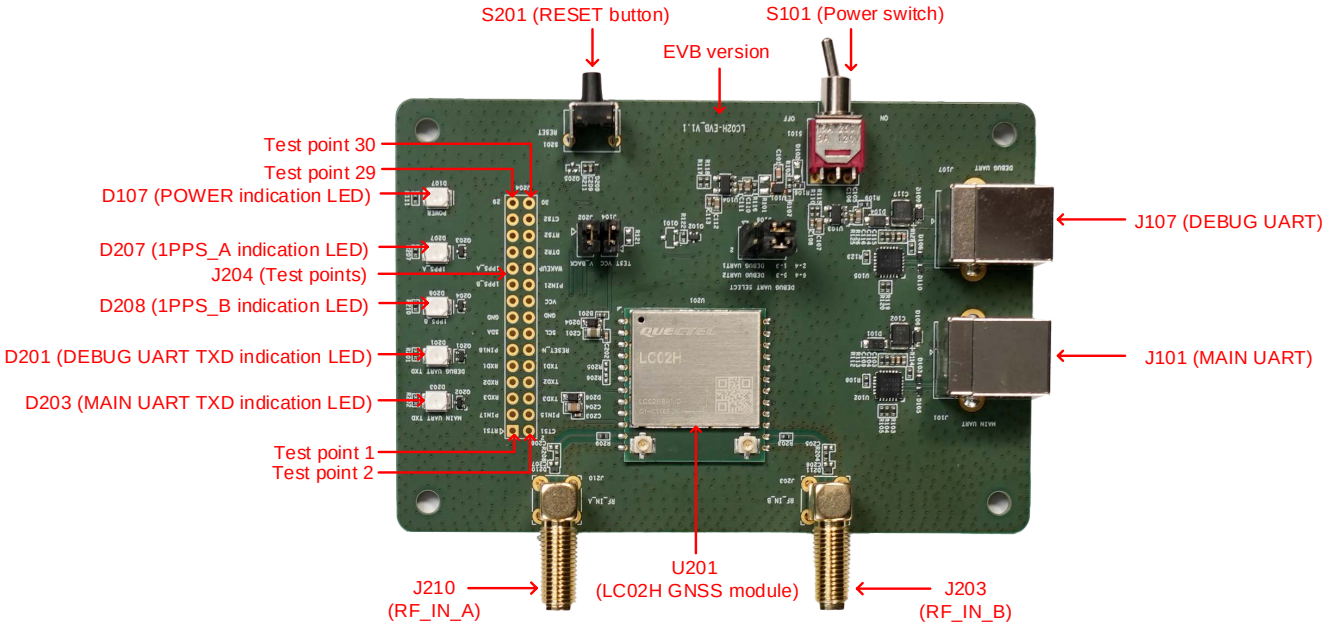

Figure 3: EVB Top View

3.2. EVB Interfaces

The EVB interfaces are detailed in the table below.

Table 3: Detailed EVB Interfaces

Function	Interfaces	Description
Power Supply	J101 Main UART	Power supply input: ● DC power supply: 4.5–5.5 V, typ. 5.0 V ● Current capability should be > 200 mA
	J107 DEBUG UART	
Communication Interfaces	J101 Main UART	Supports standard NMEA message, PQTM/PAIR message, debugging data and firmware upgrade.
	J107 DEBUG UART	Supports standard NMEA message, PQTM/PAIR message and debugging data.
SMA Connectors	J210 RF_IN_A	Used for connecting GNSS antenna.
	J203 RF_IN_B	
Signal Indication	D203 MAIN UART TXD indication LED	Flashing: Data are being output from UART1 TXD pin. Extinct or Bright: No data are output from UART1 TXD pin.
	D201 DEBUG UART TXD indication LED	Flashing: Data are being output from UART2 TXD pin. Extinct or Bright: No data are output from UART2 TXD pin.
	D207 1PPS_A indication LED	Flashing: Successful position fix. Frequency: 1 Hz. Extinct: No position fix.
	D208 1PPS_B indication LED	
	D107 POWER indication LED	Bright: Module is powered. Dim: Module is not powered.
Switches and Buttons	S101 Power switch	Powers the module on/off.
	S201 RESET button	Short press on the button to reset the module.

J204 test points are shown below:

Table 4: J204 Pin Description

Test Point No.	Test Point Label	Test Point Function	I/O	Description
1	RTS1	-	-	NC (Not Connected)
2	CTS1	-	-	NC
3	PIN17	U201: Pin 17	-	Reserved
4	PIN15	U201: Pin 15	-	Reserved
5	RXD3	U201: Pin 8	DI	RXD1: UART1 receives data
6	TXD3	U201: Pin 9	DO	TXD1: UART1 transmits data
7	RXD2	U201: Pin 19	DI	RXD2: UART2 receives data
8	TXD2	U201: Pin 20	DO	TXD2: UART2 transmits data
9	RXD1	U201: Pin 3	DI	RXD3*: UART3* receives data
10	TXD1	U201: Pin 4	DO	TXD3*: UART3* transmits data
11	PIN18	U201: Pin 18	-	Reserved
12	RESET_N	U201: Pin 7	DI	RESET_N: Resets the module
13	SDA	U201: Pin 6	-	Reserved
14	SCL	U201: Pin 5	-	Reserved
15	GND	GND	-	Ground
16	GND	GND	-	Ground
17	No label	-	-	NC
18	VCC	U201: Pin 2	PI	VCC: Main power supply
19	1PPS_B	U201: Pin 16	DO	1PPS_B:1 pulse per second of slave chip
20	PIN21	U201: Pin 21	-	Reserved
21	1PPS_A	U201: Pin 23	DO	1PPS_A:1 pulse per second of main chip
22	WAKEUP	U201: Pin 22	DI	WAKEUP: Wakes up the module from Backup

Test Point No.	Test Point Label	Test Point Function	I/O	Description
				mode
23	No label	-	-	NC
24	DTR2	-	-	NC
25	No label	-	-	NC
26	RTS2	-	-	NC
27	No label	-	-	NC
28	CTS2	-	-	NC
29	29	-	-	NC
30	30	-	-	NC

NOTE

1. Test points of J204 are shown in red font in *Figure 3: EVB Top View*.
2. A J204 test point refers to the module's corresponding function. For detailed descriptions, see *document [1] hardware design*.

4 Testing and Firmware Upgrading via QGNSS Tool

This chapter explains how to use the QGNSS software tool for verifying the status of GNSS modules and firmware upgrade. For more information about QGNSS use, see *document [2] QGNSS user guide*.

4.1. Test via QGNSS

Step 1: Assembly the EVB components.

Step 2: Connect the EVB and the PC with two Type-B USB cables via "**MAIN UART**" and "**DEBUG UART**" interfaces or connect the EVB to the PC with a Type-B USB cable via "**MAIN UART**" interface. Then flip the power switch (S101) to **ON** position to power on the module.

Step 3: Start the QGNSS and click "**Device**" and "**Set Device Information**" (default baud rate: 115200 bps [1]).

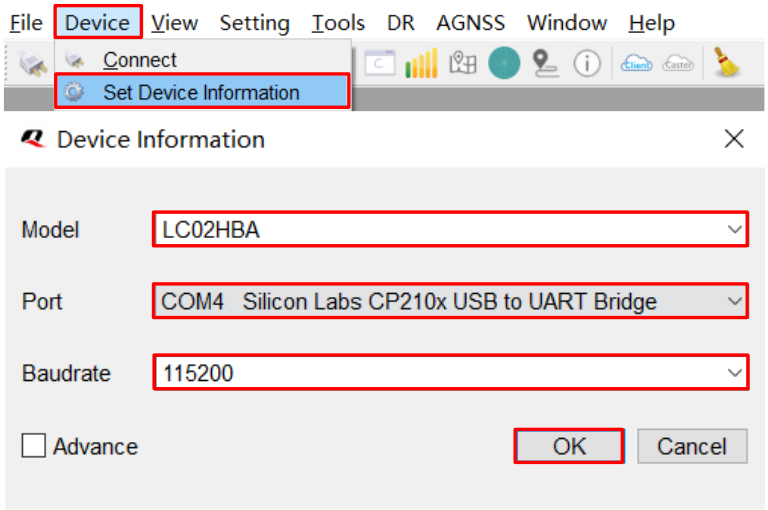

Figure 4: COM Port and Baud Rate Setting

[1] UART interface default settings may vary depending on software versions.

Step 4: Click the  "**Connect or disconnect**" button. The interface shown in the figure below appears once the module is connected.

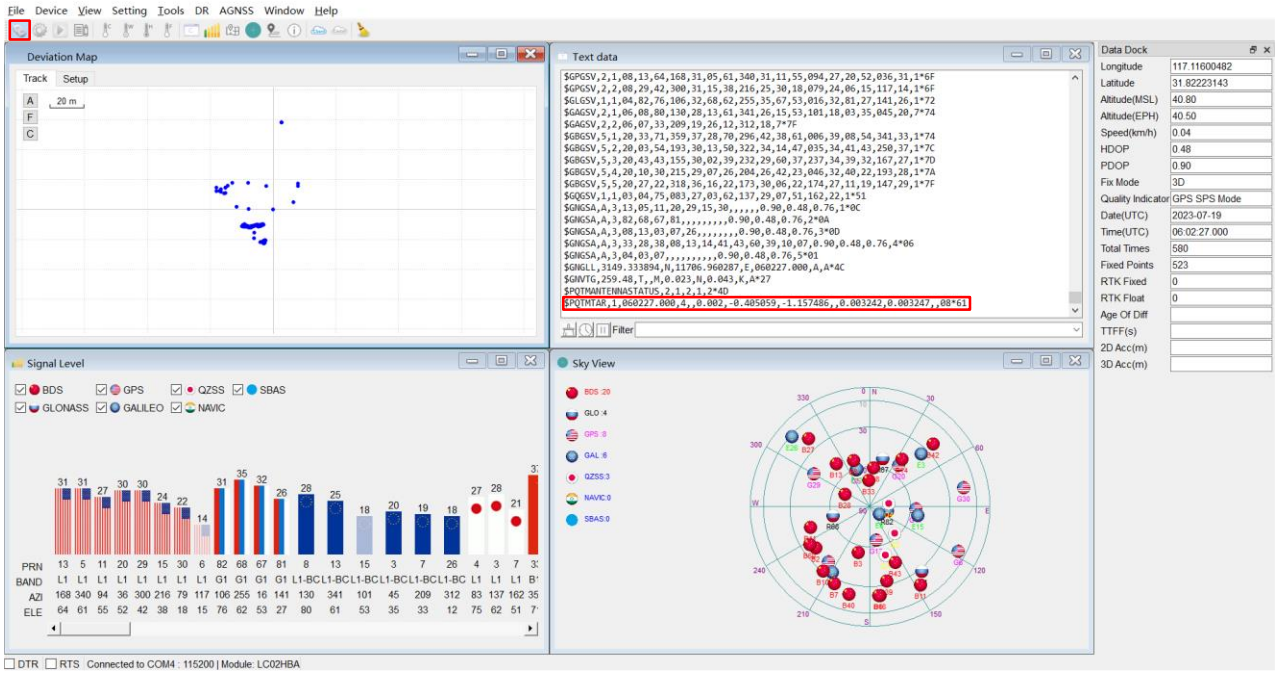

Figure 5: QGNSS Interface (Connected)

NOTE

1. Ensure the CP210x driver has been installed when you use the QGNSS tool for the first time. For more information about the driver, please contact the Quectel Technical Support (support@quectel.com).
2. The **$PQTMTAR** message is used to output time and attitude information. For more information, see *document [3] dual-antenna heading application note*.

4.2. QGNSS Interface Explanation

You can view GNSS information, such as C/N_0 message, time, position, speed, and precision in the QGNSS interface. See the following table to find out more about these parameters.

Table 5: QGNSS Interface Explanation

Icon	Explanation
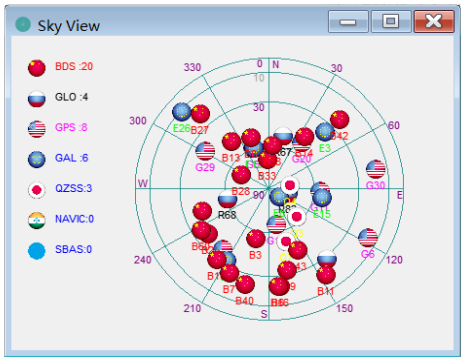	This sky view interface shows the position of the satellites in use. 1) The left column icons show the satellites in use and their numbers. ● BDS: 20 ● GLO (GLONASS): 4 ● GPS: 8 ● GAL (Galileo): 6 ● QZSS: 3 ● NAVIC: 0 ● SBAS: 0 2) The sky view on the right shows the position of the satellites in use and their PRN numbers.
The signal view shows the C/N_0 values for each satellite on each supported band and is identified by the corresponding country flags. 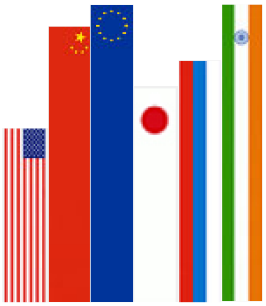	GPS satellite BDS satellite GLONASS satellite Galileo satellite QZSS satellite NAVIC satellite
Visible satellites and their used status examples are shown below: 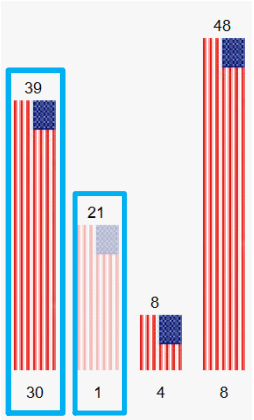	● Column in bright red means that the navigation data of the satellite is in use. ● Column in light red means that the navigation data of the satellite is not in use. ● Examples are shown below: ➢ PRN 30 C/N_0 is 39 dB-Hz and used in solution. ➢ PRN 1 C/N_0 is 21 dB-Hz and not used in solution.

Icon	Explanation
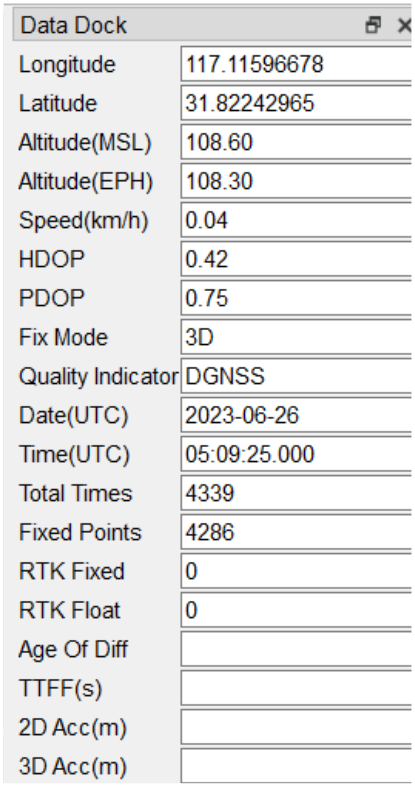	• Longitude (unit: °) (Decimal Degrees) • Latitude (unit: °) (Decimal Degrees) • Altitude (MSL) (unit: m) • Altitude (EPH) (unit: m) • Receiver speed (unit: km/h) • Horizontal dilution of precision • Position dilution of precision • Fix Mode: 2D, 3D • Quality Indicator: DGNSS, DGPS, GPS SPS, Float RTK and Fixed RTK modes • Date: UTC date • Time: UTC time • Total Times • Fixed Points • RTK Fixed • RTK Float • Age of differential GPS data • TTFF (unit: s) • 2D accuracy (unit: m) • 3D accuracy (unit: m)

4.3. Firmware Upgrading

Power on the module before upgrading the firmware. See *Chapter 4.1 Test via QGNSS* for details.

Firmware upgrading steps:

Step 1: Open QGNSS tool, and click "**Tools**" and select "**Firmware Download**" in the drop-down box.

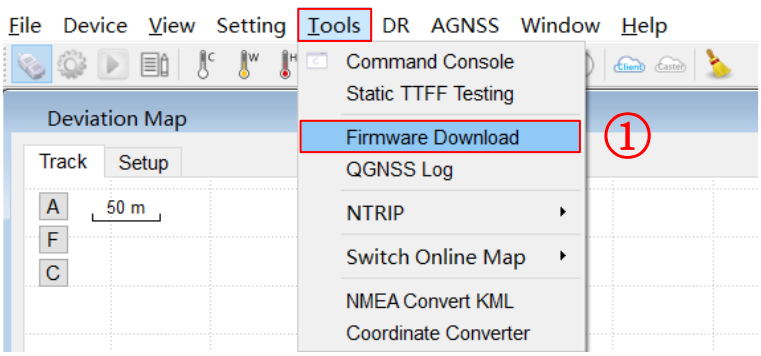

Figure 6: Tool Startup

Step 2: Select the "**Download Baudrate**" (921600 bps or 115200 bps) in the drop-down box of "**Settings**".

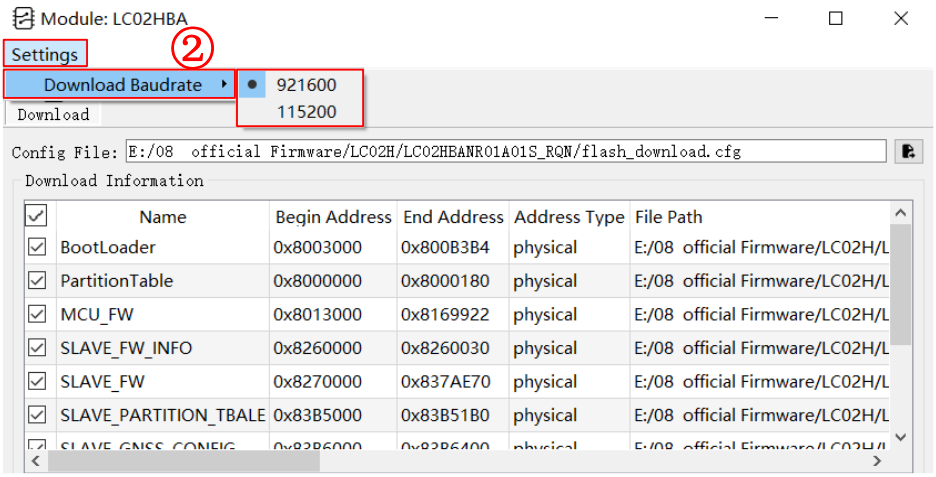

Figure 7: Tool Setting

Step 3: Click the  "**Open Config File**" button to select Config file, e.g., "**flash_download.cfg**".

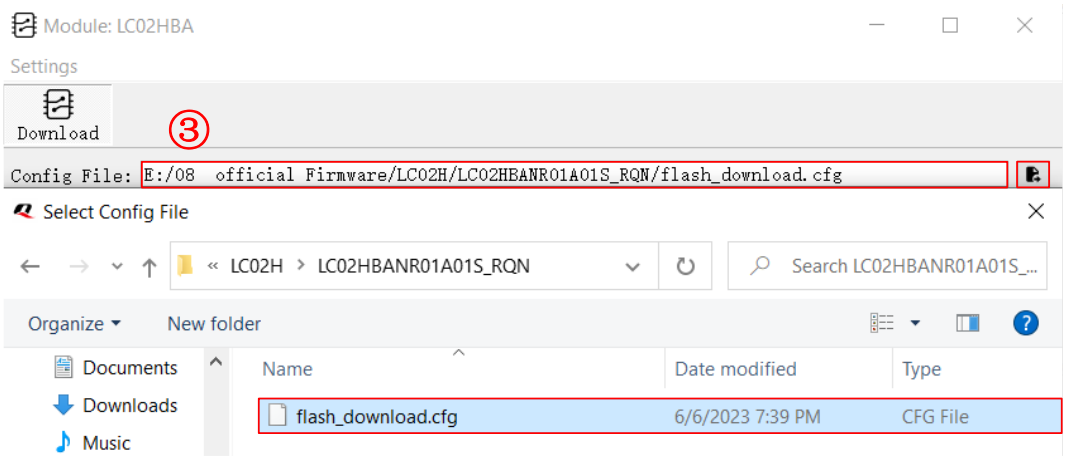

Figure 8: Firmware Selecting

Step 4: Click the  "**Run**" button and then short press the reset button after the progress bar prompts you to reset the module.

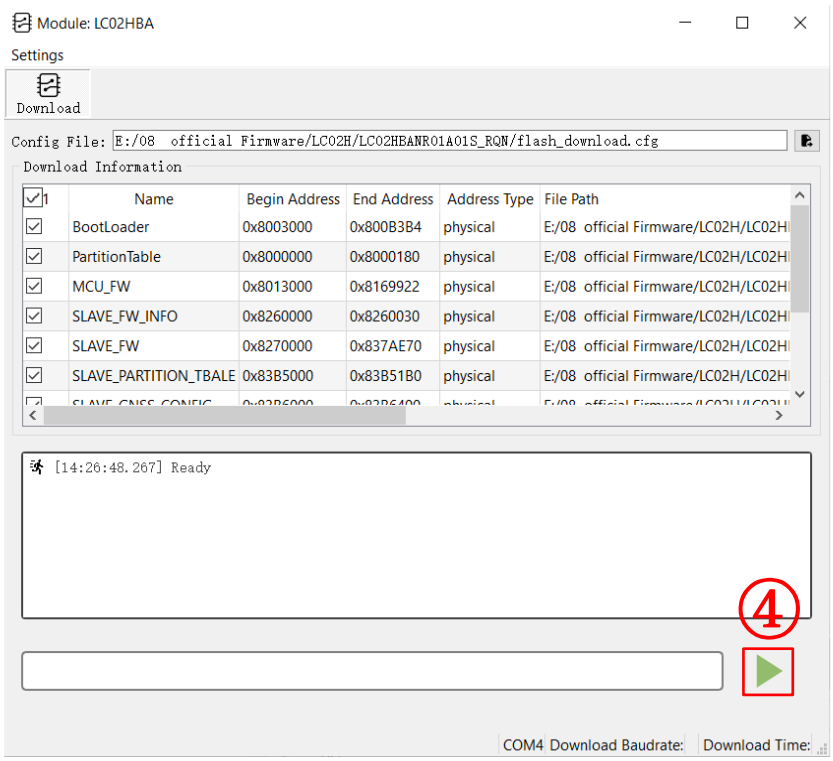

Figure 9: Firmware Upgrading – 1

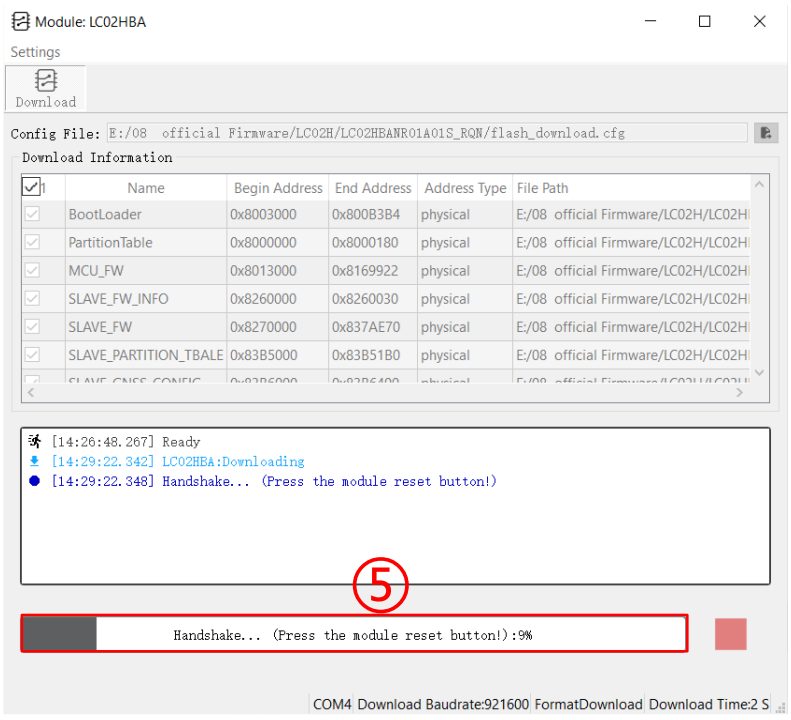

Figure 10: Firmware Upgrading – 2

Step 5: Upon successful firmware upgrading, the QGNSS tool's progress bar on the screen will indicate "100 %".

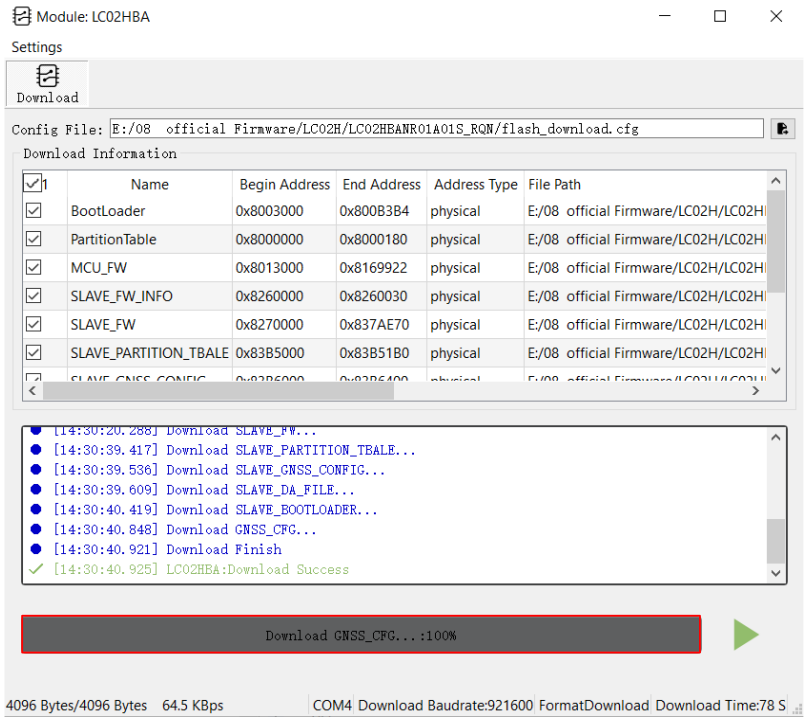

Figure 11: Successful Firmware Upgrading

5 EVB and Antenna Installation

5.1. GNSS Antenna Installation

The installation environment affects the antenna reception performance and satellite visibility, which in turn affect the position quality of a GNSS receiver. In addition, antenna's orientation can also impact its reception performance. Therefore, it is important to avoid obstacles and interference when installing antenna. Place the ceramic patch antenna horizontally and make sure it faces toward the sky.

When installing the antennas, make sure that the two antennas are on the same plane, and the positive Y-axis direction of the module is consistent with the direction of the antenna baseline vector (from antenna B to antenna A) and remains parallel to it. In addition, it should be ensured that the GNSS antennas are firmly fixed to the device under test so as to avoid any movement or vibration with respect to the device.

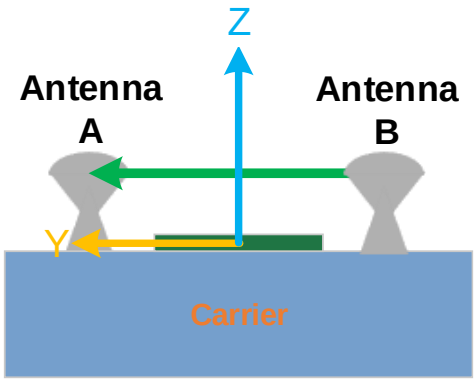

Figure 12: Standard Installation Example – Front View

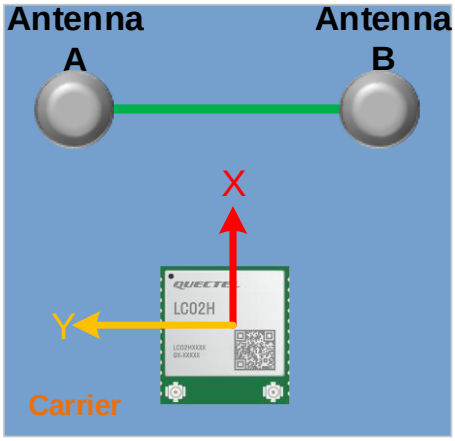

Figure 13: Standard Installation Example – Top View

5.2. EVB Installation

If dynamic testing is required, make sure the EVB is fixed to the device under test so as to avoid any movement or vibration with respect to the device.

NOTE

For more information about the installation of GNSS antennas and EVB, you can see *document [3] dual-antenna heading application note*.

6 Measuring Power Consumption

6.1. Power Consumption at Different Stages

Module power consumption is measured in three stages: acquisition and tracking (including almanac update), tracking (almanac update is over) and upon entering Backup mode.

- Acquisition and tracking (including almanac update): 0 s to 12.5 min
- Tracking (almanac update is over): > 12.5 min
- Entering Backup mode

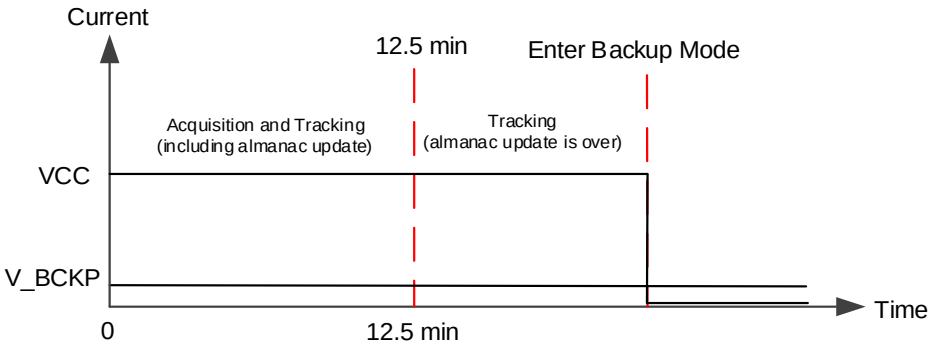

Figure 14: Power Consumption at Different Stages

6.2. VCC Power Consumption Measurement

Before measuring the VCC power consumption, you must connect the components to the EVB to ensure that the module can communicate and fix normally. See *Chapter 4.1 Test via QGNSS*.

Detailed steps for measuring VCC power consumption with an ammeter:

Step 1: Switch off the power supply (S101) and pull out the VCC jumper cap (J104). Connect the ammeter in series to both pins of J104 as shown below.

Step 2: Switch on the power supply (S101) and read the ammeter.

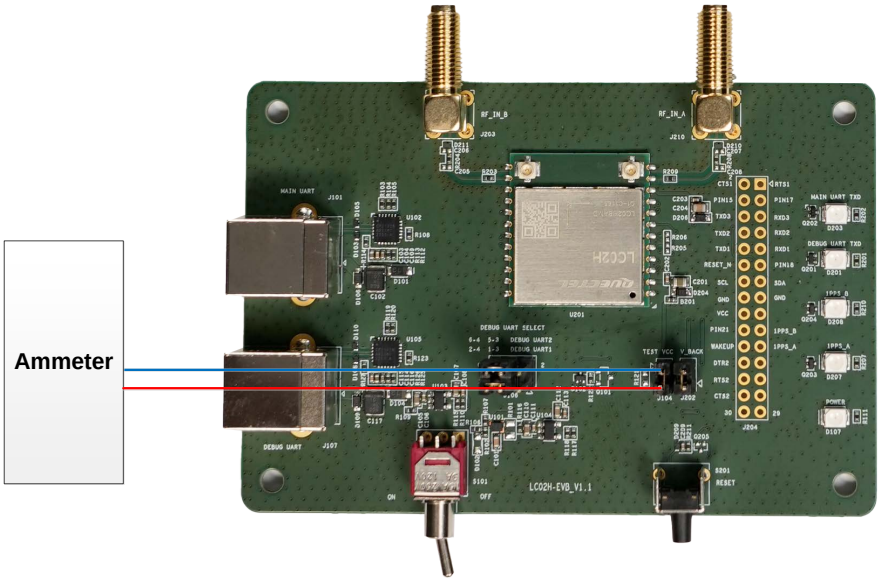

Figure 15: VCC Power Consumption Measured with Ammeter

Detailed steps for measuring VCC power consumption with a power consumption meter:

Step 1: Switch off the power supply (S101) and pull out the VCC jumper cap (J104). Make sure the positive pole of the power consumption meter is to be connected to pin 1 (with arrow silkscreen) of J104, and the negative pole is connected to GND.

Step 2: Switch on the power supply (S101) and the power consumption meter power supply in sequence. Then read the VCC power consumption after the power consumption meter reading is stable.

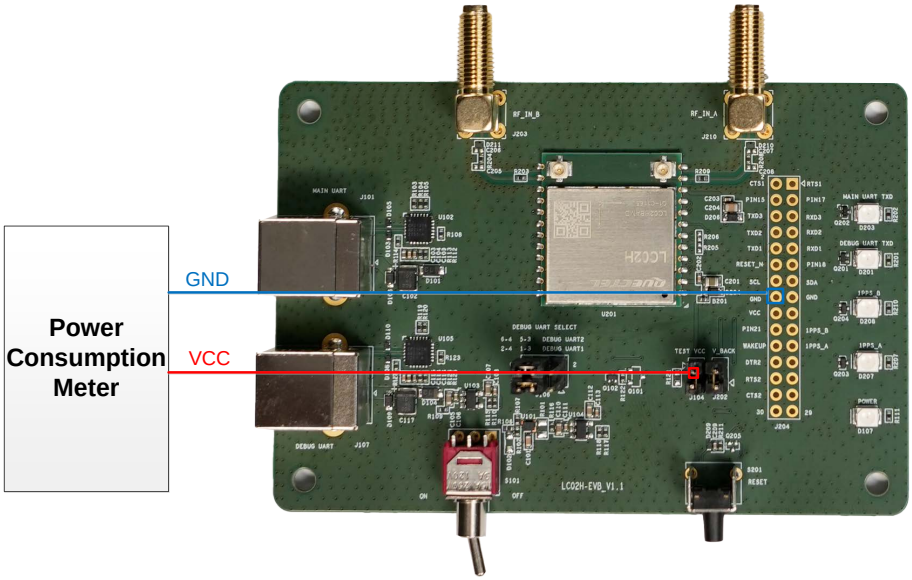

Figure 16: VCC Power Consumption Measured with Power Consumption Meter

6.3. V_BCKP Power Consumption Measurement

Before measuring the V_BCKP power consumption, you must connect the components to EVB to ensure that the module can communicate and fix normally. See *Chapter 4.1 Test via QGNSS*.

Detailed steps for measuring V_BCKP power consumption with an ammeter:

Step 1: Switch off the power supply (S101) and pull out the V_BACK jumper cap (J202). Connect the ammeter in series to both pins of J202, as shown below.

Step 2: Switch on the power supply (S101) and read the ammeter.

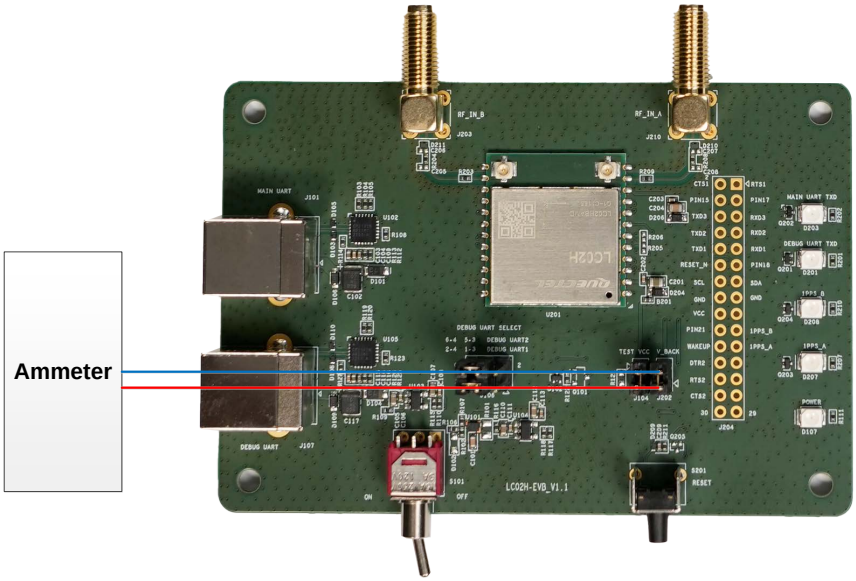

Figure 17: V_BCKP Power Consumption Measured with Ammeter

Detailed steps for measuring V_BCKP power consumption with a power consumption meter:

Step 1: Switch off the power supply (S101) and pull out the V_BACK jumper cap (J202). Then, ensure the positive pole of the power consumption meter is connected to pin 2 (without arrow silkscreen) of J202, and the negative pole is connected to GND.

Step 2: Switch on the power consumption meter power supply and the power supply (S101) in sequence. Then read the V_BCKP power consumption after the power consumption meter reading is stable.

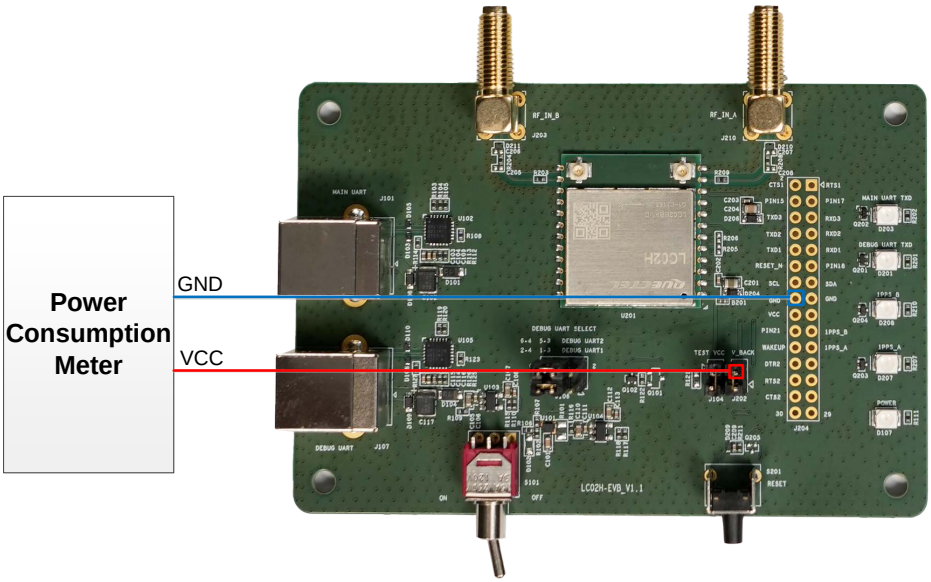

Figure 18: V_BCKP Power Consumption Measured with Power Consumption Meter

NOTE

1. Adjust the current resolution when using the power consumption meter.
2. Formula for calculating the power value: $P = V_{Supply} \times I_{Test}$.
3. Before measuring the V_BCKP power consumption in Backup mode, ensure that the module has entered Backup mode, and then remove the jumper cap of VCC (J104) to cut off the power supply of VCC. For more information about the way to enter/exit Backup mode, see *document [1] hardware design*.

7 EVB Framework

The power is supplied to EVB via Type-B, and then to the GNSS module via a low-dropout regulator (LDO). GNSS module outputs the signals from communication interface on EVB via USB-to-UART Bridge Chip (CP2102N). There are two antenna interfaces and a RESET_N button on EVB. All functions of the module are available, including debugging.

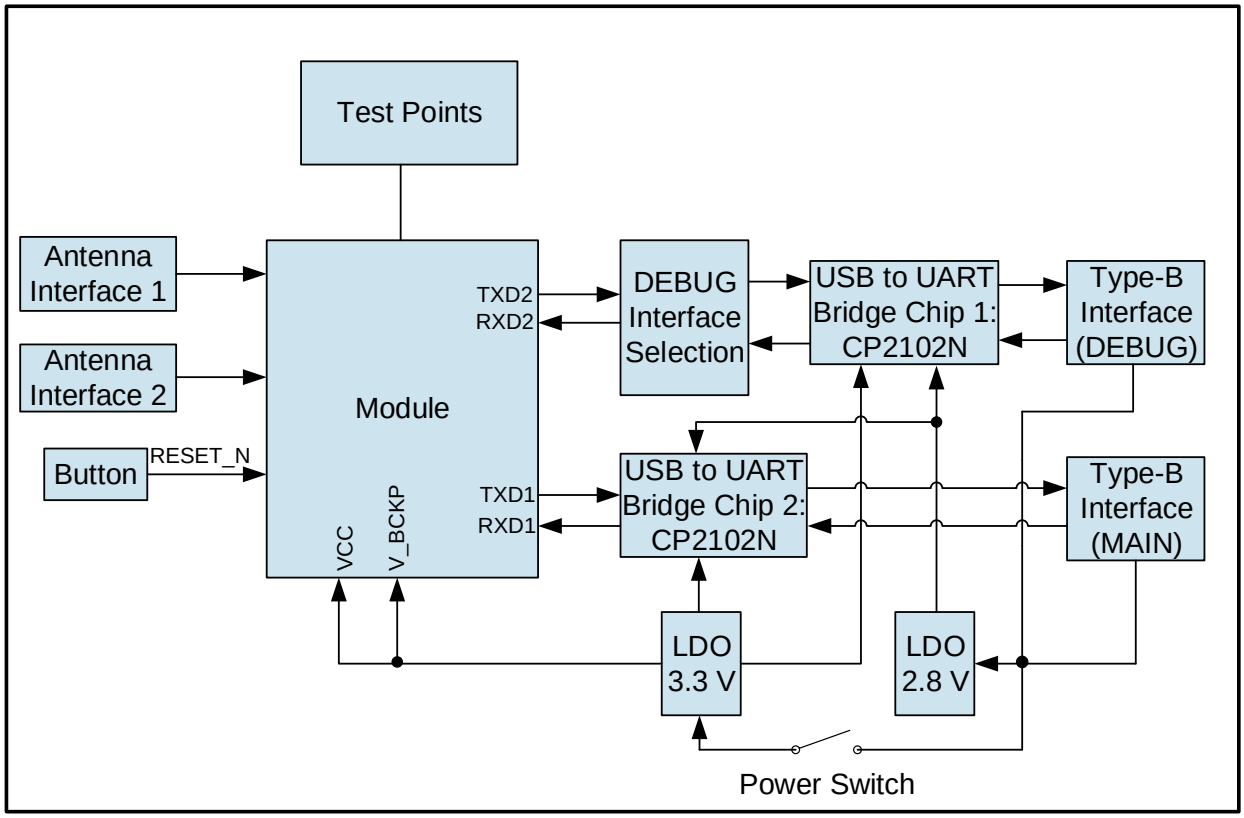

Figure 19: EVB Framework

8 Common Problems and Troubleshooting

1. **Unable to find COM port in the Device Manager when EVB is connected to PC with a USB cable.**
   - Check that the EVB communication interface is properly connected to the PC.
   - Verify that CP210x Driver has been installed successfully.

2. **Communication interface not outputting any messages or commands.**
   - Check that the power supply indication LED on the EVB is illuminated.
   - Verify that the jumper cap(s) is(/are) connected correctly, as shown in *Figure 1: EVB Kit Components*.
   - Ensure that the module's power supply is normal.

3. **Module unable to search for satellite signals.**
   - If there is no transponder indoors, test the module in an open-sky environment.

4. **Module unable to upgrade.**
   - Verify whether the module is in normal operating mode.
   - Check that the downloaded firmware is correct.
   - Confirm that the correct COM port has been selected.

NOTE

For the problem(s) that cannot be solved, please contact Quectel Technical Support (support@quectel.com).

9 Cautions

- Make sure to conduct tests at the same time and under the environment when comparing different parameters of GNSS modules.
- Note that parameters, such as cold start, acquisition and tracking, may be defined differently by chip suppliers.
- Ensure that the measurement method is correct. If there are significant differences between parameters tested via EVB and those provided by Quectel, please contact Quectel Technical Support.
- Note that momentary data obtained from measurement cannot always be regarded as reference data, because it may be affected by various factors, such as satellite positions at different times, environmental conditions, temperature, humidity and altitude.
- Keep in mind that the QGNSS tool may updated periodically to fix bugs or improve performance. Please make sure that you are using the latest version of the tool. If an update is published and is more recent than the one you have, an automatic prompt will open up and provide an option to upgrade when opening the tool.

10 Appendix References

Table 6: Related Documents

Document Name	
[1]	Quectel_LC02H(BA)_Hardware_Design
[2]	Quectel_QGNSS_User_Guide
[3]	Quectel_LC02H(BA)_Dual-Antenna_Heading_Application_Note

Table 7: Terms and Abbreviations

Abbreviation	Description
2D	Two-dimensional
3D	Three-dimensional
BDS	BeiDou Navigation Satellite System
COM Port	Communication Port
C/N_0	Carrier-to-noise-density Ratio
DC	Direct Current
DI	Digital Input
DO	Digital Output
DR	Dead Reckoning
ESD	Electrostatic Discharge
EVB	Evaluation Board
Galileo	Galileo Satellite Navigation System (EU)

Abbreviation	Description
GND	Ground
GNSS	Global Navigation Satellite System
GPS	Global Positioning System
GLONASS	Global Navigation Satellite System (Russia)
I2C	Inter-Integrated Circuit
I/O	Input/Output
LED	Light Emitting Diode
MSL	Mean Sea Level
NMEA	NMEA (National Marine Electronics Association) 0183 Interface Standard
OBD	On-Board Diagnostics
PC	Personal Computer
PCB	Printed Circuit Board
1PPS	One Pulse Per Second
PRN	Pseudorandom Noise
QZSS	Quasi-Zenith Satellite System
RF	Radio Frequency
RXD	Receive Data (Pin)
RTK	Real-Time Kinematic
SBAS	Satellite-Based Augmentation System
SCL	Serial Clock Line
SDA	Serial Data Line
SMA	SubMiniature Version A
SPS	Standard Positioning Service
TTFF	Time to First Fix

Abbreviation	Description
TXD	Transmit Data (Pin)
UART	Universal Asynchronous Receiver/Transmitter
USB	Universal Serial Bus
UTC	Coordinated Universal Time