SaleXun

REVISIONS					
REV.	ECN NO.	LOCATION	DESCRIPTION	DATE	DESIGN
A0	N/A0		INITIAL RELEASE		

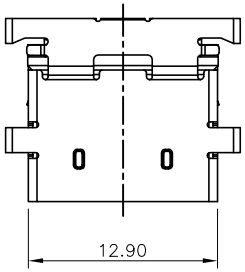

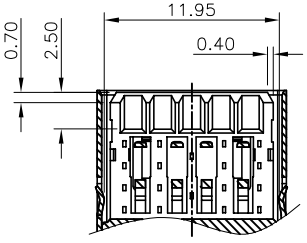

SECTION B–B

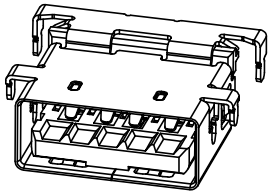

3D VIEW

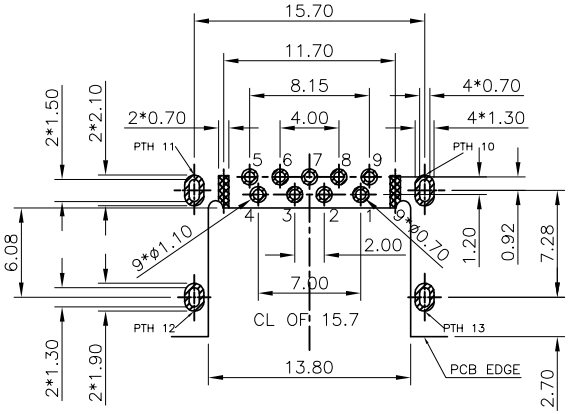

TOLERANCE: ±0.05, THICKNESS: 1.0~1.2~1.6mm

RECOMMENDED PCB LAYOUT

(TOP VIEW)

KEEP OUT AREA

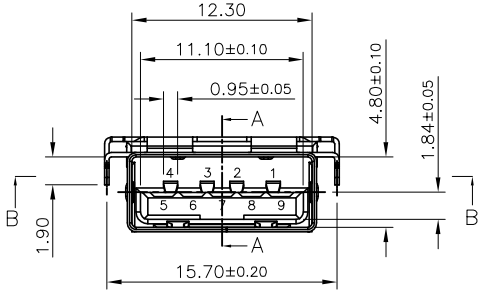

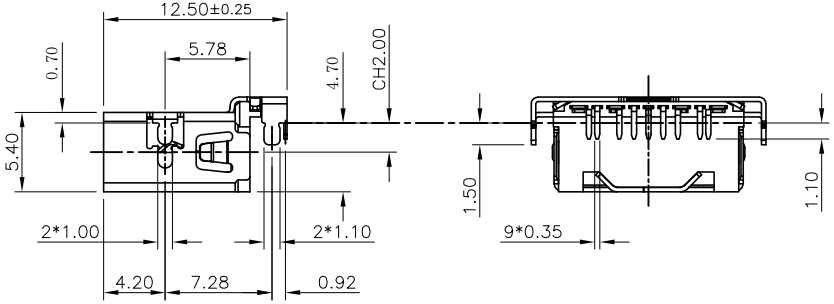

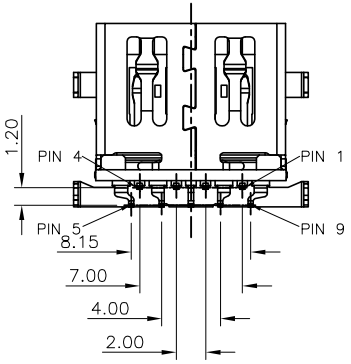

PART NO.:

NO	PART NO	HOUSING COLOR
01	U3-002T4.7-9P-1	BLACK
02	U3-002T4.7-9P-7	BLUE

Pin #	SIGNAL NAME	DESCRIPTION	MATING SEQUENCE
1	VBUS	POWER	SECOND
2	D−	USB 2.0 DIFFERENTIAL PAIR	THIRD
3	D+		
4	GND	GROUND FOR POWER RETURN	SECOND
5	StdA_SSRX−	SUPERSPEED RECEIVER DIFFERENTIAL PAIR	LAST
6	StdA_SSRX+		
7	GND_DRAIN	GROUND FOR SIGNAL RETURN	
8	StdA_SSTX−	SUPERSPEED TRANSMITTER DIFFERENTIAL PAIR	
9	StdA_SSTX+		
Shell	Shield	CONNECTOR METAL SHELL	FRIST

NOTE:
1.MATERIAL:
- 1.1 INSULATOR: LCP+30%G.F UL94 V−0;BLACK/BLUE;
- 1.2 CONTACT: COPPER ALLOY(T=0.2mm);
- 1.3 SHELL: SUS201(T=0.30mm);

2.PLATING:
- 2.1 TERMINAL: 40u" MIN NICKEL ALL OVER;
  GOLD PLATING ON CONTACT AREA;
  80u"MIN Matte Tin ON SOLDER AREA;
- 2.2 SHELL: 40u"MIN NICKEL ALL OVER;

3.ELECTRICAL CHARACTERISTICS:
- 3.1 RATE VOLTAGE: DC 30V;
- 3.2 CONTACT CURRENT RATING: 1.5A;
- 3.3 CONTACTRESISTANCE: 30mΩ Max;
- 3.4 DIELECTRIC WITHSTANDING VOLTAGE: AC 100V R.M.S;
- 3.5 INSULATION RESISTANCE: 100MΩ Min;
- 3.6 OPERATING TEMPEROTURE: −25°C ~ 85°C;

4.MECHANICAL CHARACTERISTICS:
- 4.1 MATING FORCE: 35N Max;
- 4.2 UNMATED FORCE: 10N Min INITIAL;8N Min AFTER TEST;
- 4.3 DURABILITY: 5,000 CYCLES;

5.BE MAINTAINED FOR 10 SECONDS AT 260±5°C;
6.SOLDERING PROCESS: REFLOW SOLDERING.

This document is the property of SaleXun development corporation.

Unless Otherwise specified, Tolerance:
X. ±0.30
X.x ±0.20
X.xx ±0.15
X.xxx ±0.10
ANGLES ±3°
Tel:0769-82889209

Dongguan SaleXun Electronic Co.,Ltd.

DESIGN:	DATE:	TITLE: SLIM USB3.0 AF REVERSE DIP; SUBSTRATE 4.7; BOARD 0.7;		
CHECKED:	DATE:			
APPROVED:	DATE:			
PART NO.:SEE PART NO.		REV.: A0	SCALE: 1:1	UNIT: mm
DRAWING NO.:C-U3-002T4.7-00		SIZE: A4	SHEET: 1/1	

SaleXun