1 Product Identification

GDNR	252012	-	1R0	M	T	F
①	②		③	④	⑤	⑥

① Product Symbol

② Dimensions（See two）

③ Inductance Value (1R0:1.0μH)

④ Inductance Tolerance (J:±5%;K:±10%; M:±20%; N:±30%)

⑤ Packaging Style (B: Bulk; T: Tape & Reel)

⑥ Lead Free

2 Appearance, Dimensions(mm)

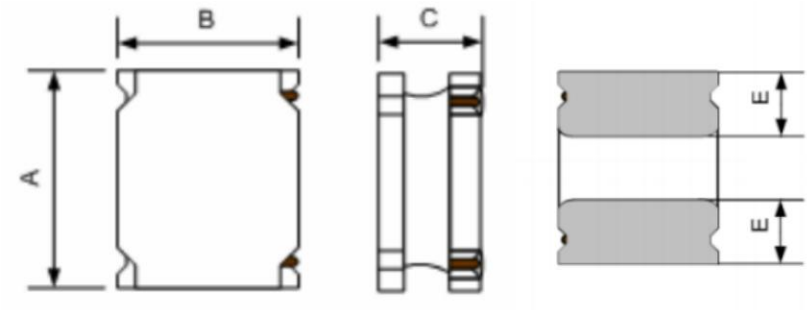

A	B	C	E
2.5±0.2	2.0±0.2	1.2max	0.8±0.2

LAND PATTERN DIMENSIONS

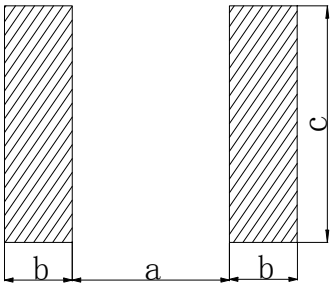

/	mm
a	0.80
b	0.85
c	2.00

3 Specifications

Part No.	Inductance L0(uH) ±20% @100KHz/1V	RDC (mΩ)Max	Saturation Current (A)Max	Heat Rating Current (A)Max
GDNR252012-1R0MTF	1.0	90	2.4	1.93
GDNR252012-2R2MTF	2.2	216	1.85	1.15
GDNR252012-4R7MTF	4.7	377	1.12	0.84

※ Note

*Rated current is the DC current that reduces the initial inductance by 30% or when the temperature rises △ T = 40℃

4 Packaging

(1) Dimensions of Reel（mm）

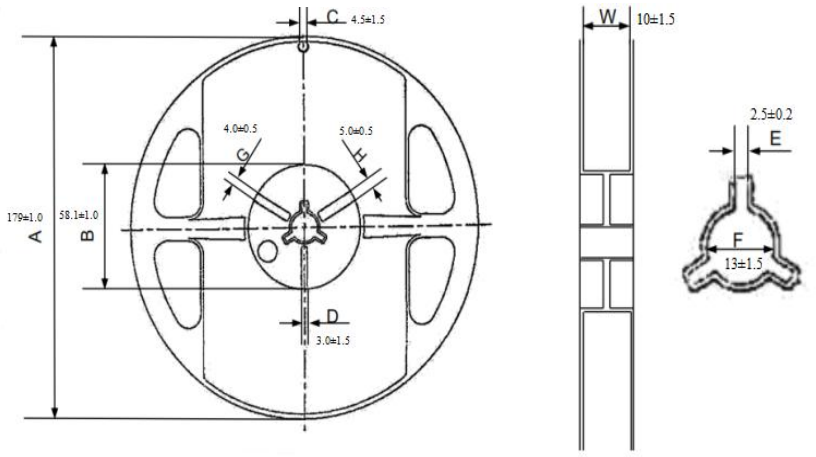

(2) Dimensions of Tape (mm):

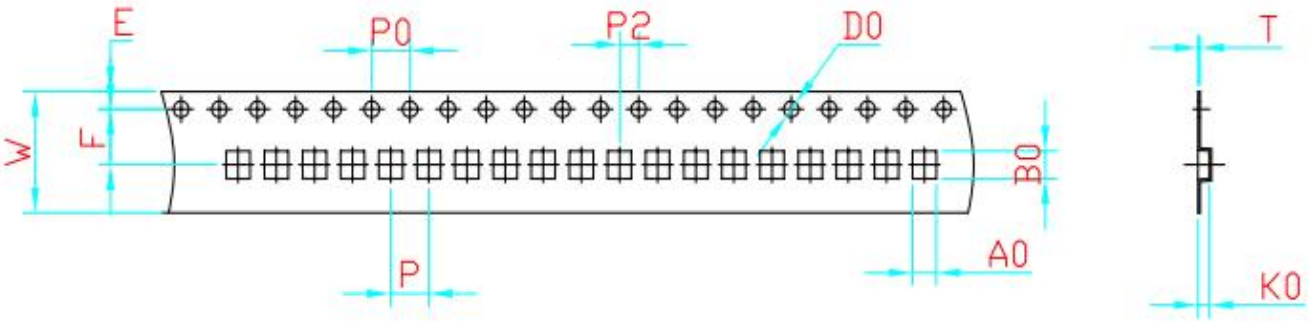

W	A0	B0	K0	P	F	E	D	P0	P2	T	Packaging quantity
8.0 ±0.3	2.4 ±0.1	2.85 ±0.1	1.4 ±0.1	4.0 ±0.1	3.5 ±0.1	1.75 ±0.1	1.55+ 0.1/-0.0	4.0 ±0.1	2.0 ±0.1	0.2 ±0.05	2000PCS/REEL