规格书 Specification



制造商:深圳市毫欧电子有限公司 HoAR

适用：本规格书适用于深圳市毫欧电子有限公司贴片陶瓷电阻 HoAR 系列产品选型。

包括： HoAR0210/ HoAR0402/ HoAR0603/ HoAR0805/ HoAR1206/ HoAR1210/ HoAR2010/ HoAR2512/

■ 产品特点 Features：

先进的薄膜技术，高精度低至±0.01%

低温漂 TCR 低至±1PPM /℃

电阻范围 1mR~3MR 微型尺寸 0201 可用 符合 ROHS 要求

■ 产品名称 Product Name

贴片陶瓷电阻

■ 产品型号 Product number

Ho	AR	2512	1/2W	10R	1%	50ppm
供应商	产品系列	封装	额定功率(W)	阻值(mR)	精度(%)	温度系数 TCR（ppm）
Ho 毫欧电子	AR 陶瓷贴片	0201	1/32	49.9R~33KR	0.1%~1%	25~50
		0402	1/16	4.7R~511KR	0.1%~1%	5~50
		0603	1/16	1R~511KR	0.1%~1%	10~50
		0805	1/10	1R~200KR	0.1%~1%	5~50
		1206	1/8	1R~499KR	0.1%~1%	5~50
		1210	1/4	1R~499KR	0.1%~1%	5~50
		2010	1/4	1R~499KR	0.1%~1%	5~50
		2512	1/2	1R~499KR	0.1%~1%	5~50

国家高新技术企业 IATF16949 ISO9001 TÜV SÜD SGS

地址：深圳市龙华新区观澜大布头路南通邦高新产业园 A 栋 8 楼

深圳市毫欧电子有限公司 | 电话：0755-28153546 | 传真：0755-22630181 | 网址：www.moolee.com.cn

■ 产品尺寸 Product Size

1. Alumina Substrate
2. Bottom Electrode
3. Top Electrode
4. Edge Electrode
5. Barrier Layer
6. External Electrode
7. Resistor Layer
8. Primary Overcoat
9. Secondary Overcoat

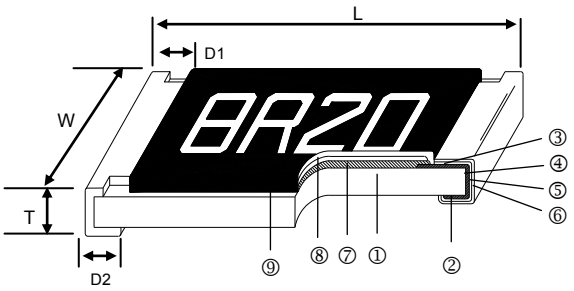

产品尺寸：

型号	L(mm)	W(mm)	T(mm)	D1(mm)	D2(mm)
HoAR 0201	0.58±0.05	0.29±0.05	0.23±0.05	0.12±0.05	0.15±0.05
HoAR0402	1±0.05	0.5±0.05	0.30±0.05	0.2±0.1	0.2±0.1
HoAR0603	1.55±0.1	0.8±0.1	0.45±0.1	0.3±0.2	0.3±0.2
HoAR0805	2±0.15	1.25±0.15	0.55±0.1	0.30±0.2	0.4±0.20
HoAR 1206	3.05±0.15	1.55±0.15	0.55±0.1	0.42±0.2	0.35±0.25
HoAR1210	3.1±0.15	2.4±0.15	0.55±0.1	0.4±0.2	0.55±0.25
HoAR2010	4.9±0.15	2.4±0.15	0.55±0.1	0.6±0.3	0.5±0.25
HoAR 2512	6.3±0.15	3.1±0.15	0.55±0.1	0.6±0.3	0.5±0.25

■ 电气参数 Electrical parameter

额定功率 Rated power	1/32~1W
阻值范围 Resistance range	1R~511KR
额定压降 Max. Operating Voltage	15V~400V
准确度等级 AccuracyClass	0.1%、1%
电阻温度系数 T.C.R (ppm / ℃)	±5~±50
工作温度范围 Operating Temperature Range	-55℃~+155℃

■ 功率曲线 Power curve

操作温度范围 - 55 ～+155 ℃电阻温度达到 70℃时降功率示意图

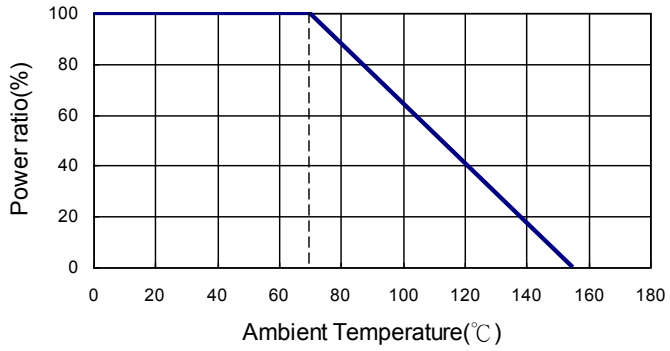

■ 额定电流计算公式 The rated current is calculated by the following Formu

I :Rated Current (A)
P:Rated Power (W)
R:Resistance Value (Ω)

$$I = \sqrt{P/R}$$

■ 标准电气规范（低阻值） Standard Electrical Specifications(Lower Resistance)

Item / Type	Power Rating at 70℃	Operating Temp. Range	Max. Operating Voltage	Max. Overload Voltage	Resistance Range					TCR (PPM/°C)
					±0.05%	±0.1%	±0.25%	±0.5%	±1%	
HoAR0201	1/32W	-55 ~ +155°C	15V	30V	–			49.9Ω - 4.99KΩ		±25
								49.9Ω - 33KΩ		±50
HoAR(0402)	1/16W	-55 ~ +155°C	25V	50V	49.9Ω - 12KΩ	10Ω - 511KΩ	4.7Ω – 511KΩ			±25,±50
HoAR (0603)	1/16W	-55 ~ +155°C	50V	100V	4.7Ω -332KΩ	4.7Ω - 1MΩ	1Ω - 1MΩ			±25,±50
HoAR(0805)	1/10W	-55 ~ +155°C	100V	200V	4.7Ω -1MΩ	4.7Ω - 2MΩ	1Ω - 2MΩ			±25,±50
HoAR (1206)	1/8W	-55 ~ +155°C	150V	300V	4.7Ω - 1MΩ	4.7Ω - 2.49MΩ	1Ω - 2.49MΩ			±25,±50
HoAR(1210)	1/4W									
HoAR(2010)	1/4W	-55 ~ +155°C	150V	300V	4.7Ω - 1MΩ	4.7Ω - 3MΩ	1Ω - 3MΩ			±25,±50
HoAR (2512)	1/2W									

■ 特殊电气规格Special Electrical Specifications

Item / Type	Power Rating at 70℃	Operating Temp. Range	Max. Operating Voltage	Max. Overload Voltage	Resistance Range						TCR (PPM/℃)
					±0.01%	±0.05%	±0.1%	±0.25%	±0.5%	±1%	
HoAR(0402)	1/16W	-55 ~ +155°C	25V	50V	49.9Ω - 4.99KΩ			—			±1, ±2,±3
					49.9Ω - 20KΩ						±5
					49.9Ω - 20KΩ		49.9Ω - 100KΩ				±10
							49.9Ω -69.8KΩ				±15
HoAR (0603)	1/16W	-55 ~ +155°C	50V	100V	24.9Ω - 15KΩ			—			±1, ±2,±3
					24.9Ω - 60KΩ						±5
					24.9Ω - 100KΩ	4.7Ω-332KΩ	4.7Ω - 511KΩ				±10, ±15
HoAR(0805)	1/10W	-55 ~ +155°C	100V	200V	24.9Ω - 30KΩ			—			±1, ±2,±3
					24.9Ω - 150KΩ						±5
					24.9Ω - 200KΩ	4.7Ω – 1MΩ					±10, ±15
HoAR (1206)	1/8W	-55 ~ +155°C	150V	300V	24.9Ω - 49.9KΩ			—			±1, ±2,±3
					24.9Ω - 300KΩ						±5
					24.9Ω - 499KΩ	4.7Ω – 1.5MΩ					±10, ±15
HoAR (1210)	1/ 4W	-55 ~ +155°C	150V	300V	24.9Ω - 49.9KΩ			—			±1, ±2,±3
					24.9Ω - 300KΩ						±5
					24.9Ω - 499KΩ	4.7Ω - 1MΩ					±10, ±15
HoAR (2010)	1/4W	-55 ~ +155°C	150V	300V	24.9Ω - 100KΩ			—			±1, ±2,±3
					24.9Ω - 300KΩ						±5
					24.9Ω - 499KΩ	4.7Ω - 1MΩ					±10, ±15
HoAR(2512)	1/2W	-55 ~ +155°C	150V	300V	24.9Ω - 100KΩ			—			±1, ±2,±3
					24.9Ω - 300KΩ						±5
					24.9Ω - 499KΩ	4.7Ω - 1MΩ					±10, ±15

■ 高功率等级电气规范 / High Power Rating Electrical Specification

Item / Type	Power Rating at 70°C	Operating Temp. Range	Max. Operating Voltage	Max. Overload Voltage	Resistance Range						TCR (PPM/°C)
					±0.01%	±0.05%	±0.1%	±0.25%	±0.5%	±1%	
HoAR (0402)	1/10W	-55 ~ +155°C	50V	100V	49.9Ω - 4.99KΩ			—			±1, ±2,±3
					49.9Ω - 4.99KΩ						±5
					49.9Ω - 12KΩ		49.9Ω - 60KΩ				±10
							49.9Ω -69.8KΩ				±15
					—	49.9Ω - 12KΩ	10Ω - 255KΩ	4.7Ω~255KΩ			±25,±50
HoAR (0603)	1/10W	-55 ~ +155°C	75V	150V	24.9Ω - 15KΩ			—			±1, ±2,±3
					24.9Ω - 15KΩ						±5
					24.9Ω - 100KΩ	4.7Ω - 332KΩ	4.7Ω - 332KΩ				±10,±15
							4.7Ω -1MΩ				±25,±50
	1/6W	-55 ~ +155°C	100V	150V	—	10Ω - 332KΩ					±25,±50
HoAR(0805)	1/8W	-55 ~ +155°C	150V	300V	24.9Ω - 30KΩ			—			±1, ±2,±3
					24.9Ω - 30KΩ						±5
					24.9Ω - 200KΩ	4.7Ω -511KΩ	4.7Ω -511KΩ				±10
							4.7Ω - 1MΩ				±15
							4.7Ω - 1MΩ	1Ω - 1MΩ			±25,±50
	1/4W	-55 ~ +155°C	150V	300V	—	10Ω - 499KΩ					±25,±50
HoAR (1206)	1/4W	-55 ~ +155°C	200V	400V	24.9Ω - 49.9KΩ			—			±1, ±2,±3
					24.9Ω - 49.9KΩ						±5
					24.9Ω - 499KΩ	4.7Ω - 1MΩ					±10,±15,±25,±50
	1/3W	-55 ~ +155°C	200V	400V	—	10Ω ~1MΩ					±25,±50
HoAR(1210)	1/ 3W	-55 ~ +155°C	200V	400V	24.9Ω – 49.9KΩ			—			±1, ±2,±3
					24.9Ω – 49.9KΩ						±5
					24.9Ω - 499KΩ	4.7Ω - 1MΩ					±10,±15,±25,±50
HoAR(2010)	1/3W	-55 ~ +155°C	200V	400V	24.9Ω - 49.9KΩ			—			±1, ±2,±3
					24.9Ω - 49.9KΩ						±5
					24.9Ω - 499KΩ	4.7Ω - 1MΩ					±10,±15,±25,±50
HoAR(2512)	3/4W	-55 ~ +155°C	200V	400V	24.9Ω - 2KΩ	4.7Ω – 2KΩ		1Ω – 2KΩ			±10,±15,±25,±50
	1W	-55 ~ +155°C	200V	400V	—		4.7Ω – 100Ω	1Ω – 100Ω			±25,±50

Operating Voltage=$\sqrt{}$(P*R) or Max. operating voltage listed above, whichever is lower.
Overload Voltage=2.5*$\sqrt{}$(P*R) or Max. overload voltage listed above, whichever is lower.

■ 环境特征 Environmental Characteristics

Item	Requirement		Test Method
	Tol. ≦ 0.05%	Tol. > 0.05%	
Temperature Coefficient of Resistance (T.C.R.)	As Spec.		**MIL-STD-202 Method 304** +25/-55/+25/+125/+25°C
Short Time Overload	ΔR±0.05%	ΔR±0.2%	**JIS-C-5201-1 4.13** RCWV*2.5 or Max. overload voltage whichever is lower for 5 seconds
	ΔR±0.2% for high power rating		
Insulation Resistance	>9999 MΩ		**MIL-STD-202 Method 302** Apply 100V_{DC} for 1 minute
Endurance	ΔR±0.05%	ΔR±0.2%	**MIL-STD-202 Method 108A** 70±2°C, RCWV for 1000 hrs with 1.5 hrs "ON" and 0.5 hrs "OFF"
	>7kΩ ΔR±0.5%		
	ΔR±0.5% for high power rating		
Damp Heat with Load	ΔR±0.05%	ΔR±0.3%	**MIL-STD-202 Method 103B** 40±2°C, 90~95% R.H. RCWV for 1000 hrs with 1.5 hrs "ON" and 0.5 hrs "OFF"
	ΔR±0.5% for high power rating		
Bending Strength	ΔR±0.05%	ΔR±0.1%	**JIS-C-5201-1 4.33** Bending amplitude 3 mm for 10 seconds
Solderability	95% min. coverage		**MIL-STD-202 Method 208H** 245±5°C for 3 seconds
Resistance to Soldering Heat	ΔR±0.05%	ΔR±0.1%	**MIL-STD-202 Method 210E** 260±5°C for 10 seconds
Dielectric Withstand Voltage	By Type		**MIL-STD-202 Method 301** Max. overload voltage for 1 minute
Thermal Shock	ΔR±0.05%	ΔR±0.2%	**MIL-STD-202 Method 107G** -55°C ~150°C, 100 cycles
Low Temperature Operation	ΔR±0.05%	ΔR±0.2%	**JIS-C-5201-1 4.36** 1 hour, -65°C, followed by 45 minutes of RCWV
	ΔR±0.5% for high power rating		
High Temperature Exposure	ΔR±0.5%		**MIL-STD-202 Method 108** at +155°C for 1000 hrs

(Rated continuous working voltage)= √(P*R) or Max. Operating voltage whichever is lower ■
Storage Temperature: 15~28°C; Humidity < 80%RH

（1）最高温度260°C下进行回流焊接的时间：10s
（2）最高温度点260°C下波峰焊接的时间：10s
（3）最高温度410℃下烙铁的时间：5s

回流焊曲线图

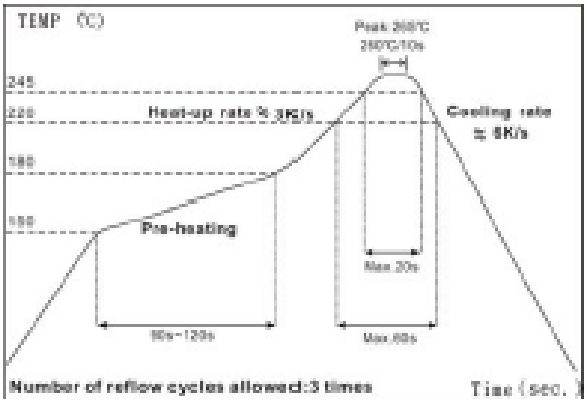

波峰焊曲线图

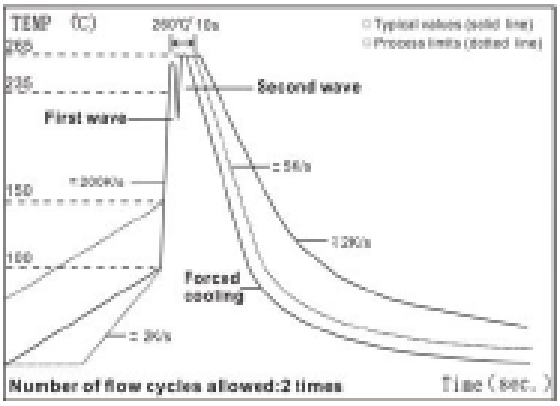

■ 建议焊盘尺寸 Recommended Solder Pad Dimension

型号	A(mm)	B(mm)	C(mm)
HoAR 0201	0.25	0.3	0.4±0.2
HoAR0402	0.5	0.5	0.6±0.2
HoAR0603	0.8	1	0.9±0.2
HoAR0805	1.0	1	1.35±0.2
HoAR 1206	2.0	1.15	1.7±0.2
HoAR1210	2.0	1.15	2.5±0.2
HoAR2010	3.6	1.4	2.5±0.2
HoAR 2512	4.9	1.6	3.1±0.2

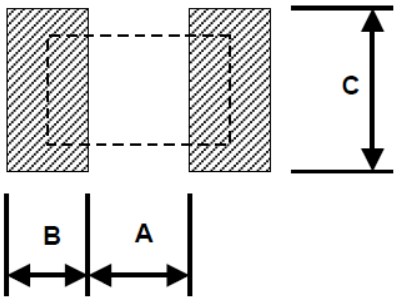

■ 卷轴规格 /包装方式 Reel Specification /Packing

Unit :mm

Type	ØA	ØB	ØC	W	T	Paper Tape (EA)	Emboss Plastic Tape (EA)
HoAR0201	178.0±1.0	60.0+1.0	13.5±0.7	9.5±1.0	11.5±1.0	10,000	-
HoAR0402	178.0±1.0	60.0+1.0	13.5±0.7	9.5±1.0	11.5±1.0	10,000	-
HoAR0603	178.0±1.0	60.0+1.0	13.5±0.7	9.5±1.0	11.5±1.0	5,000	-
HoAR0805	178.0±1.0	60.0+1.0	13.5±0.7	9.5±1.0	11.5±1.0	5,000	-
HoAR1206	178.0±1.0	60.0+1.0	13.5±0.7	9.5±1.0	11.5±1.0	5,000	-
HoAR1210	178.0±1.0	60.0+1.0	13.5±0.7	9.5±1.0	11.5±1.0	5,000	-
HoAR2010	178.0±1.0	60.0+1.0	13.5±0.7	13.5±1.0	15.5±1.0	-	4,000
HoAR2512	178.0±1.0	60.0+1.0	13.5±0.7	13.5±1.0	15.5±1.0	-	4,000

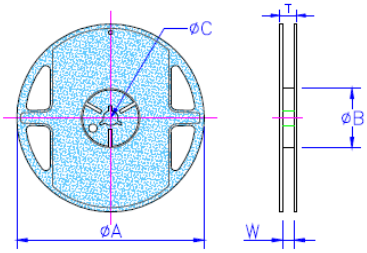

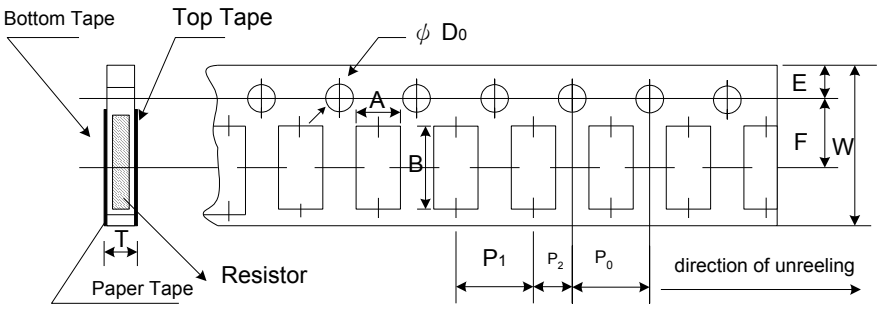

Unit: mm

Type	A	B	W	E	F	P_0	P_1	P_2	ΦD_0	T
HoAR0201	0.40±0.05	0.70±0.05	8.00±0.10	1.75±0.05	3.5±0.05	4.00±0.10	2.00±0.05	2.00±0.05	1.55±0.03	0.42±0.02
HoAR0402	0.70±0.05	1.16±0.05	8.00±0.10	1.75±0.05	3.5±0.05	4.00±0.10	2.00±0.05	2.00±0.05	1.55±0.05	0.40±0.03
HoAR0603	1.10±0.05	1.90±0.05	8.00±0.10	1.75±0.05	3.5±0.05	4.00±0.10	4.00±0.10	2.00±0.05	1.55±0.05	0.60±0.03
HoAR0805	1.60±0.05	2.37±0.05	8.00±0.10	1.75±0.05	3.5±0.05	4.00±0.10	4.00±0.10	2.00±0.05	1.55±0.05	0.75±0.05
HoAR1206	2.00±0.05	3.55±0.05	8.00±0.10	1.75±0.05	3.5±0.05	4.00±0.10	4.00±0.10	2.00±0.05	1.55±0.05	0.75±0.05
HoAR1210	2.75±0.05	3.40±0.05	8.00±0.10	1.75±0.05	3.5±0.05	4.00±0.05	4.00±0.10	2.00±0.05	1.60±0.10	0.75±0.05

顶盖胶带的剥离力应在8gf至60gf之间

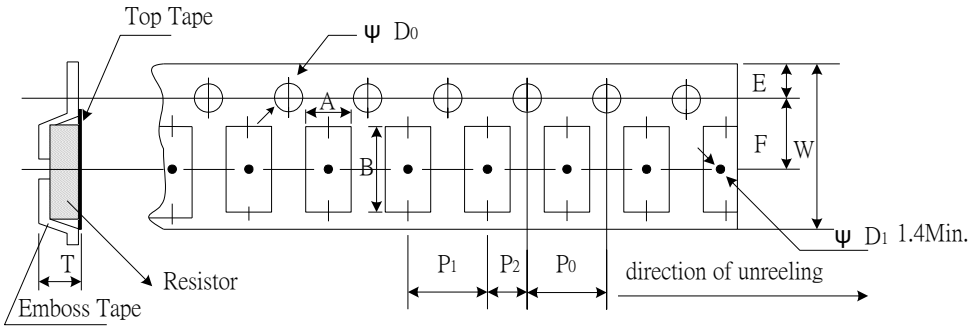

Unit: mm

Type	A	B	W	E	F	P_0	P_1	P_2	$ØD_0$	T
HoAR2010	2.85±0.10	5.45±0.10	12.0±0.10	1.75±0.10	5.5±0.05	4.00±0.05	4.00±0.10	2.00±0.05	1.50+0.10	1.00±0.20
HoAR2512	3.40±0.10	6.65±0.10	12.0±0.10	1.75±0.10	5.5±0.05	4.00±0.05	4.00±0.10	2.00±0.05	1.50+0.10	1.00±0.20

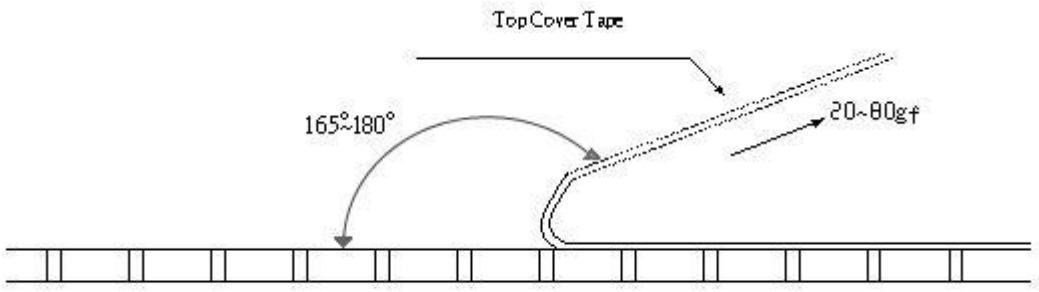

顶盖胶带的剥离力
剥离速度约为300mm / min±5%
顶盖胶带的剥离力应在20gf至80gf之间

Unikeyic Electronics

Global Electronic Components Distributor

Click to view pricing, inventory, delivery, and lifecycle information:

Milliohm:

To-220-35W-20R-1% To-247-100W-51R-5% HoYLR2512-3W-3mR-1% HoCS1206-560mR-1%-TCR200 HoJLR2512-3W-4mR-1% HoJLR2512-3W-75mR-1% HoLLR2512-3W-6mR-1% To-220-35W-5R-5% HoJLR2512-2W-6mR-1% HoJLR2512-2W-10mR-1% HoYH1206-1W-250mR-1% HolRS3921-5W-0.2mR-1% HoLR2512-330mR-1% HoLRM2512-2W-10mR-1% HoYLR1206-1W-20mR-1% HOXTo-220-20W-100R-5% HoCS1206-330mR-1%-TCR200 HoLLR2512-3W-35mR-1% HoLR2512-170mR-1% HoFL2-500A-75mV-0.5%-YS HoJLR2512-2W-50mR-1%-75ppm HoJLR2512-3W-140mR-1% HoLLR1206-1W-5mR-1% HoJLR1206-1W-2mR-1% HoJLR1206-1W-50mR-1%-75ppm To-220-20W-120R-5% HoK1210.5-20-M HoLLR2512-3W-3mR-1% HoSS5930-7W-3mR-1% HoXGS1575-7W-2mR-1%